

Image may differ from product. See technical specification for details.

SNL 520-617 V

Split plummer (pillow) block housing, SNL 2, 3, 5 and 6 series

SNL plummer (pillow) block housings are the most popular SKF bearing housings on the market, developed to be the first choice for design, quality and economy. They enable the incorporated bearings to achieve maximum service life with less need for maintenance. Different housing variants and seal designs are available, making the use of tailored

housings virtually unnecessary and enabling cost-effective bearing arrangements to be made.

- Easy to install
- Cost-effective bearing arrangement
- Reduce maintenance
- Minimize lubricant leakage

Overview

Dimensions

Diameter of bearing seat	180 mm
Width of bearing seat	70 mm
Centre height (pillow block)	112 mm
Centre distance between bolt holes	320 mm
Attachment bolt diameter	24 mm

Properties

Housing type	Plummer/pillow block
Housing configuration	Two-piece
Mounting arrangement	Through shaft/Shaft end
Number of bolt holes for fasteners	2
Material, housing	Cast iron
Bearing housing seal type	Without
Housing lubrication feature/possibility	Grease

Logistics

Product net weight	18.3 kg
eClass code	23-05-17-01
UNSPSC code	31171519

Technical specification

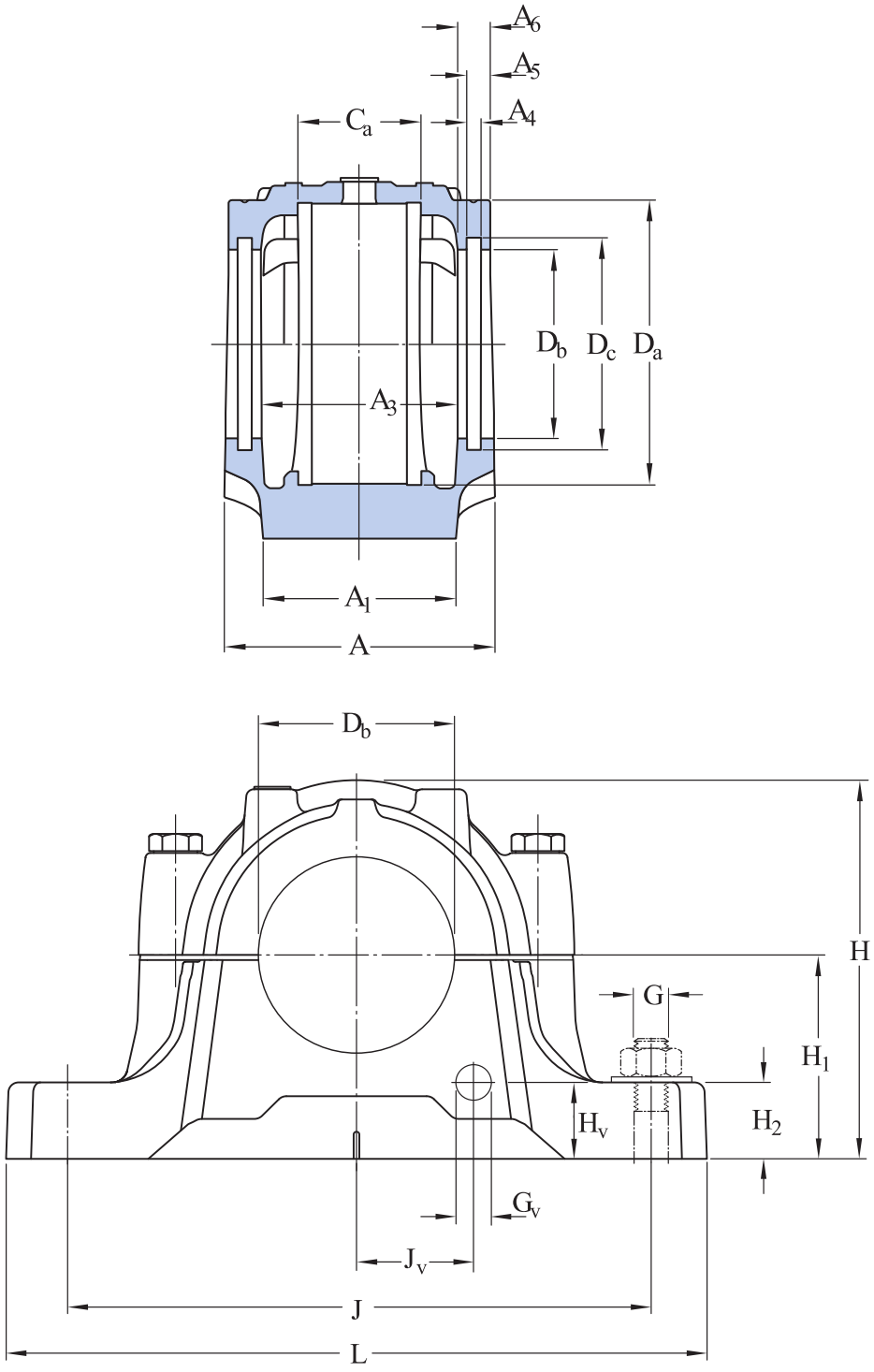

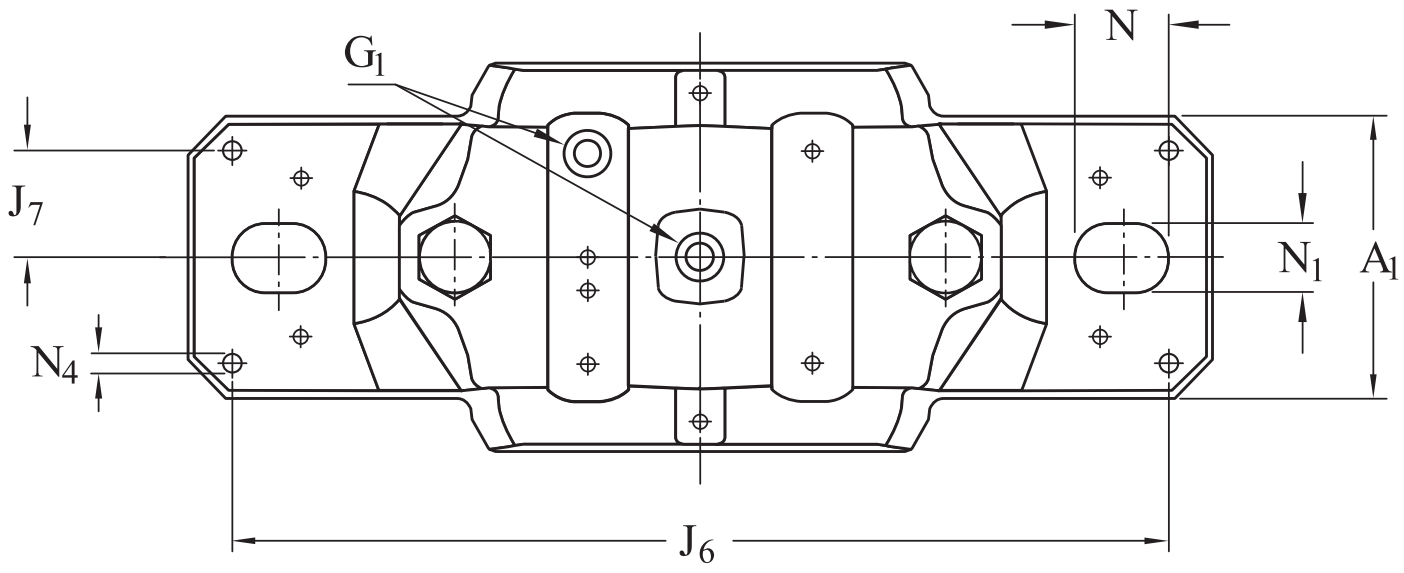

Dimensions

BEARING SEAT

D_a	180 mm	Diameter of bearing seat
	G7	Tolerance class of bearing seat diameter
C_a	70 mm	Width of bearing seat
H_1	112 mm	Centre height of bearing seat

OUTSIDE DIMENSIONS

D_b	137.5 mm	Bore diameter
A	160 mm	Overall width
A_1	110 mm	Foot width
G_1	1/8-27 NPSF	Thread of relubrication holes
H	218 mm	Overall height
H_2	40 mm	Foot height
L	380 mm	Overall length
J	320 mm	Distance between attachment bolts

N	32 mm	Length of attachment bolt hole
N_1	26 mm	Width of attachment bolt hole

SEAL GROOVES

A_3	131 mm	Inside width between seal grooves
A_4	6 mm	Width of seal groove
A_5	10 mm	Distance to seal groove back face
A_6	14 mm	Width at bore diameter
D_c	147.5 mm	Diameter of seal groove

GREASE ESCAPE HOLE

J_V	65 mm	Position of grease escape hole
H_V	38 mm	Position of grease escape hole
G_V	G 1/2	Thread of grease escape hole

DOWEL PINS

J_6	348 mm	Distance between dowel pins
J_7	39 mm	Axial offset of dowel pins
N_4	max. 8 mm	Diameter of dowel pins

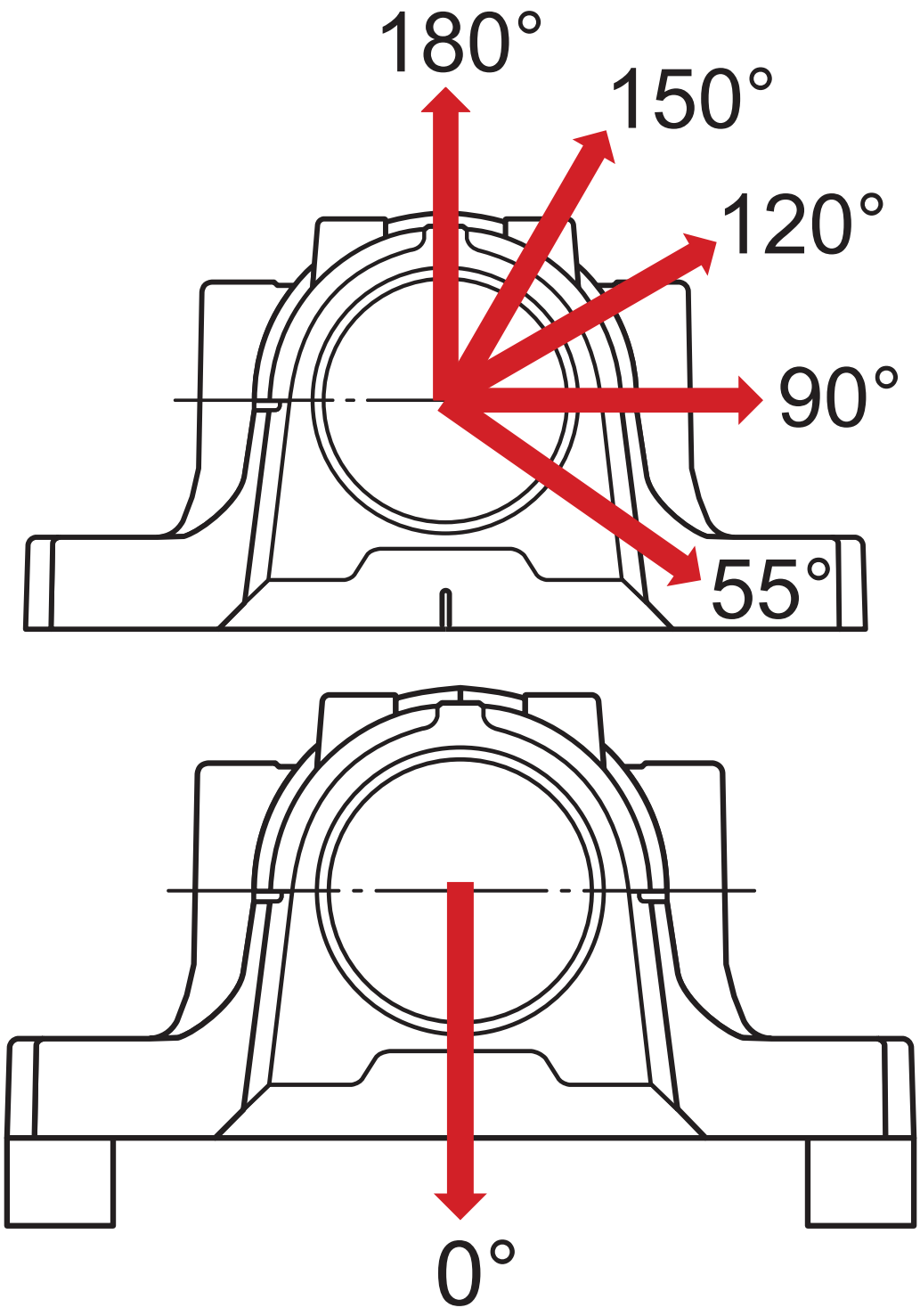

Calculation data

BREAKING LOADS

$P_{0°}$	470 kN	Breaking load at 0° load angle (if the housing is not supported over its entire base)

$P_{55°}$	620 kN	Breaking load at 55° load angle
$P_{90°}$	370 kN	Breaking load at 90° load angle
$P_{120°}$	280 kN	Breaking load at 120° load angle
$P_{150°}$	250 kN	Breaking load at 150° load angle
$P_{180°}$	310 kN	Breaking load at 180° load angle
P_a	200 kN	Breaking load, axial

YIELD POINTS OF CAP BOLTS

$Q_{120°}$	620 kN	Load to reach yield point at 120° load angle
$Q_{150°}$	360 kN	Load to reach yield point at 150° load angle
$Q_{180°}$	310 kN	Load to reach yield point at 180° load angle

Materials

Housing material	Cast iron
Corrosion protection	Paint - in accordance with ISO 12944-2, corrosivity category C2

Mounting information

Recommended diameter of attachment bolts	G	24 mm
Recommended tightening torque for attachment bolts		665 N·m
Size of cap bolts		M20x100
Tightening torque for cap bolts		200 N·m
Initial grease fill, 20%		390 g
Initial grease fill, 40%		630 g

Included products

Grease fitting	AH 1/8-27 PTF

More Information

Designs and variants

- Standard housing design
- Housing variants
- Sealing solutions

Product details

- Permissible misalignment
- Typical shaft-bearing combinations
- Locating/non-locating support
- Loads
- Temperature limits
- Permissible speed
- Lubrication
- Mounting
- Condition monitoring
- Associated products
- Ordering information
- Designation system

Tools

- SKF Product select
- SimPro Quick
- Tool and Accessory Selector for sleeves and shafts
- LubeSelect for SKF greases
- Drive-up Method Program
- Heater selection tool
- Oil Injection Method Program

Terms of use

By accessing and using this website / app owned and published by AB SKF (publ.) (556007-3495 · Gothenburg) (“SKF”), you agree to the following terms and conditions:

Warranty Disclaimer and Limitation of Liability

Although every care has been taken to assure the accuracy of the information on this website / app, SKF provides this information "AS IS" and DISCLAIMS ALL WARRANTIES, EXPRESS OR IMPLIED, INCLUDING, BUT NOT LIMITED TO, IMPLIED WARRANTIES OF MERCHANTABILITY AND FITNESS FOR A PARTICULAR PURPOSE. You acknowledge that your use of this website / app is at your sole risk, that you assume full responsibility for all costs associated with use of this website / app, and that SKF shall not be liable for any direct, incidental, consequential, or indirect damages of any kind arising out of your access to, or use of the information or software made available on this website / app.

Any warranties and representations in this website / app for SKF products or services that you purchase or use will be subject to the agreed upon terms and conditions in the contract for such product or service.

Further, for non-SKF websites / apps that are referenced in our website / app or where a hyperlink appears, SKF makes no warranties concerning the accuracy or reliability of the information in these websites / apps and assumes no responsibility for material created or published by third parties contained therein. In addition, SKF does not warrant that this website / app or these other linked websites / apps are free from viruses or other harmful elements.

Third Party Services

When viewing YouTube content via the SKF website(s) (i.e. using YouTube API Services), you agree to be bound by the YouTube Terms of Service.

Copyright

Copyright in this website / app copyright of the information and software made available on this website / app rest with SKF or its licensors. All rights are reserved. All licensed material will reference the licensor that has granted SKF the right to use the material. The information and software made available on this website / app may not be reproduced, duplicated, copied, transferred, distributed, stored, modified, downloaded or otherwise exploited for any commercial use without the prior written approval of SKF. However, it may be reproduced, stored and downloaded for use by individuals without prior written approval of SKF. Under no circumstances may this information or software be supplied to third parties.

This website /app includes certain images used under license from Shutterstock, Inc.

Trademarks and Patents

All trademarks, brand names, and corporate logos displayed on the website / app are the property of SKF or its licensors, and may not be used in any way without prior written approval by SKF. All licensed trademarks published on this website / app reference the licensor that has granted SKF the right to use the trademark. Access to this website / app does not grant to the user any license under any patents owned by or licensed to SKF.

Changes

SKF reserves the right to make changes or additions to this website / app at any time.