PMA Prozeß- und Maschinen-Automation GmbH

UNIFLEX CI 45
universal transmitter



UNIFLEX CI 45

UNIFLEX CI 45

UNIFLEX CI 45

UNIFLEX CI 45

rail line

Operating manual

English

9499-040-71711

Valid from: 06/2009

BlueControl®

**More efficiency in engineering,
more overview in operating:
The projecting environment for the BluePort® controllers, indicators
rail line and measuring converter, controller, temperature limiter**



ATTENTION!
Mini Version and Updates on
www.pma-online.de
or on PMA-CD

Description of symbols:

General information

General warning

Attention: ESD sensitive devices

Caution: read the operating instructions

Read the operating instructions

Hint

© 2004 PMA Prozeß- und Maschinen-Automation GmbH • Printed in Germany
All rights reserved. No part of this document may be reproduced or published in any form
or by any means without prior written permission from the copyright owner.

A publication of PMA Prozeß- und Maschinen Automation
P.O.Box 310229
D-34058 Kassel
Germany

Table of content

1. General 5

2. Safety hints 6

2.1 Maintenance, repair, modification 6

2.2 Cleaning 7

2.3 Spare parts 7

3. Mounting 8

3.1 Connectors 9

4. Electrical connections 10

4.1 Connecting diagram 10

4.2 Terminal connections 10

4.3 Connecting diagram 12

4.4 Connection examples 12

4.5 Hints for installation 13

4.5.1 cULus approval 13

5. Operation 14

5.1 Front view 14

5.2 Operating structure 15

5.3 Behaviour after supply voltage switch-on 15

5.4 Operating level 15

5.4.1 Display line1 15

5.4.2 Display line 2 16

5.4.3 Switching over by means of the Enter key 16

5.4.4 Slave pointer function 17

5.4.5 Selecting the units 17

5.4.6 Extended operating level 18

6. Functions 19

6.1 Linearization 19

6.2 Input scaling 20

6.2.1 Input fail detection 21

6.2.2 Two-wire measurement 21

6.2.3 Scaling with potentiometer measurement 21

6.3 Temperature compensation, measured via INP2 (optional) 22

6.4 Filter 23

6.5 Substitue value for inputs 23

6.6 Input forcing 23

6.7 O_2 measurement (optional) 23

6.8 Counter (optional) 25

6.9 Frequency input (optional) 26

6.10 Arithmetic functions 27

6.11 Tare function (optional) 28

6.12 Sample&hold amplifier (optional) 28

6.13 Integrator function 29

6.14 Limit value processing 29

6.14.1 Measured value monitoring 30

6.14.2 Monitoring the number of operating hours and switching cycles 32

6.15 Analog output configuration . . . 33
6.15.1 Analog output . . . 33
6.15.2 Logic output . . . 34
6.15.3 Transmitter power supply . . . 34
6.15.4 Frequency output (optional) . . . 35
6.15.5 Analog output forcing . . . 35
6.16 Maintenance manager / error list . . . 36
6.17 Reset to factory setting . . . 37

7. Configuration level . . . 38
7.1 Configuration survey . . . 38
7.2 Configurations . . . 39

8. Parameter setting level . . . 47
8.1 Parameter survey . . . 47
8.2 Adjustment . . . 47
8.3 Parameters . . . 48

9. Calibrating level . . . 49
9.1 Offset correction . . . 50
9.2 2-point correction . . . 51

10. BlueControl® engineering tool . . . 52

11. Versions . . . 53

12. Technical Data . . . 54

13. Index . . . 59

1 General

Thank you very much for buying a Universal Transmitter UNIFLEX CI 45.
UNIFLEX CI 45 transmitters are suitable for precise, cost-efficient signal detection and processing. Every CI 45 is equipped with at least one universal input, one universal output and a relay. Optionally, the transmitter can be fitted with an additional relay.
Galvanic isolation is provided between inputs and outputs as well as from the supply voltage and the communication interfaces.

Applications

CI 45 is used for measurement, scaling and separation of electrical signals, e.g. for

- Heat treatment plants
- Drying equipment
- Furnace builders
- Metallurgy
- Kilns
- General machine building
- Research and development
- Energy measurement
- Signal conversion

...

At-a-glance survey of advantages

Compact construction, only 22,5 mm wide
Clips onto top-hat DIN rail
Plug-in screw terminals or spring clamp connectors
Dual-line LC display with additional display elements
Process values always in view
Convenient 3-key operation
Direct communication between rail-mounted transmitters
Universal input with high signal resolution (>15 bits) reduces stock keeping
Universal output with high resolution (14 bits) as combined current / voltage output
Quick response, only 100 ms cycle time, i.e. also suitable for fast signals
One or two relay outputs
Customer-specific linearization
Measurement value correction (offset or 2-point)
Min/max indicator ('slave pointer')
Logical linking of digital outputs, e.g. for common alarms
Preset of output value

* This documentation includes already several options which will be available only with operating version 2 instruments.

Further documentation for universal transmitter CI 45:

– Data sheet CI 45	9498 737 48313
– Operating note CI 45	9499 040 71441
– Interface description	9499 040 72011

2 Safety hints

This instrument was built and tested in accordance with VDE 0411-1 / EN 61010-1 and was shipped in safe condition. The unit complies with European guideline 89/336/EEC (EMC) and is provided with the CE-marking.
The instrument was tested before delivery and has passed the tests required in the test plan. In order to maintain this condition and to ensure safe operation, the user must follow the hints and warnings given in these operating instructions and operate this instrument in compliance with the instructions given in this manual.

The unit is intended exclusively for use as a measuring and control instrument in technical installations.

Warning
If the instrument is so heavily damaged that safe operation seems impossible, the instrument must not be taken into operation.

ELECTRICAL CONNECTIONS

The electrical connections must conform to local standards (e.g. VDE 0100). The input leads must be kept separate from signal and mains leads.
A circuit breaker or a power switch must be provided for the instrument and marked accordingly in the installation. The circuit breaker or power switch must be installed near the instrument and easily accessible for the operator.

COMMISSIONING

Before instrument switch-on, ensure that the rules given below were followed:

- Ensure that the supply voltage corresponds to the specification on the type label.
- All covers required for contact safety must be fitted.
- Before instrument switch-on, check, if other equipment and/or facilities connected in the same signal loop is / are not affected. If necessary, appropriate protective measures must be taken.
- The instrument may be operated only when mounted in its enclosure.
- The temperature limits specifed for operation of the unit must be met before and during operation.

Warning
During operation, the ventilation slots of the housing must not be covered.

The measurement inputs are designed for measurement of circuits which are not connected directly with the mains supply (CAT I). The measurement inputs are designed for transient voltage peaks up to 800V against PE.

SHUT-DOWN

For permanent shut-down, disconnect the instrument from all voltage sources and protect it against accidental operation.
Before instrument switch-off, check that other equipment and / or facilities connected in the same signal loop is / are not affected. If necessary, appropriate measures must be taken.

2.1 Maintenance, repair, modification

The instruments need no particular maintenance.
No operable controls are mounted inside the instrument, i.e. the operator must not open the unit.

Modification, maintenance and repair may be carried out only by trained, authorized persons. For this purpose, the user is invited to contact the PMA service.

Warning
When opening the instruments, or when removing covers and components, live parts or terminals can be exposed.

Caution
When opening the instruments, electrostatically sensitive components can be exposed.

The PMA service can be contacted as follows:

PMA Prozeß- und Maschinen-Automation GmbH
Miramstraße 87
D-34123 Kassel

Tel. +49 (0)561 / 505-1257
Fax +49 (0)561 / 505-1357
e-mail: mailbox@pma-online.de

2.2 Cleaning

Housing and front panel of the instrument can be cleansed using a dry, lintfree cloth.

2.3 Spare parts

The following accessories are permitted as spare parts for the transmitter:

Description	Order no.
Connector set with screw terminals	9407-998-07101
Connector set with spring clamp terminals	9407-998-07111
Bus connector for fitting in top-hat rail	9407-998-07121

3 Mounting

Abmessungen / dimensions

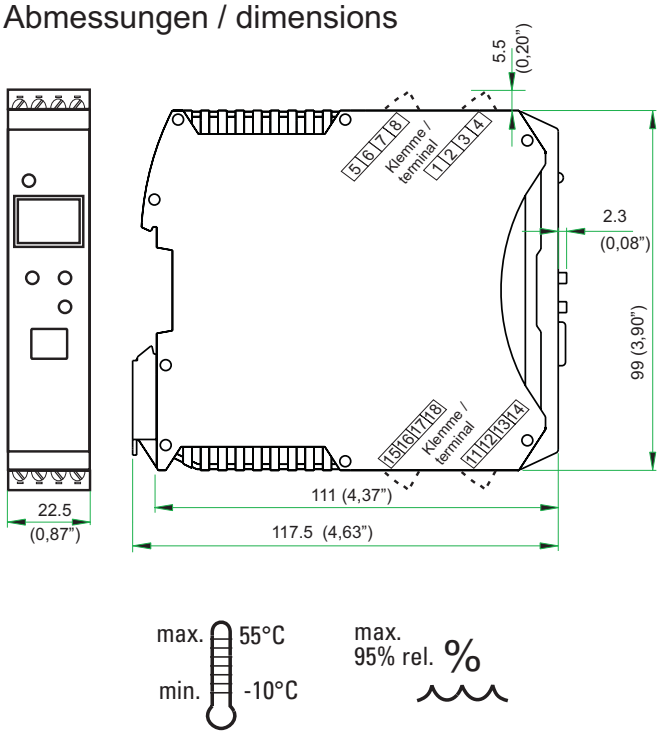

Montage / mounting

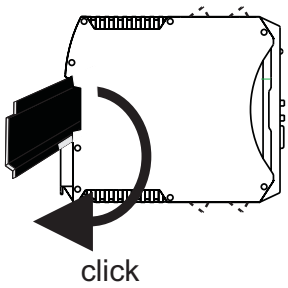

Demontage / dismantling

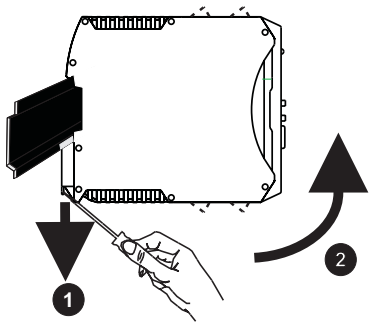

The unit is provided for vertical mounting on 35 mm top-hat rails to EN 50022.

If possible, the place of installation should be exempt of vibration, aggressive media (e.g. acid, lye), liquid, dust or aerosol.

The instruments of the *rail line* series can be mounted directly side by side. For mounting and dismounting, min. 8 cm free space above and below the units should be provided.

For mounting, simply clip the unit onto the top-hat rail from top and click it in position.
To dismount the unit, pull the bottom catch down using a screwdriver and remove the unit upwards.

Transmitter CI 45 does not contain any maintenance parts, i.e. the unit need not be opened by the customer.

The unit may be operated only in environments for which it is suitable due to its protection type.

The housing ventilation slots must not be covered.

In plants where transient voltage peaks are susceptible to occur, the instruments must be equipped with additional protective filters or voltage limiters!

Caution! The instrument contains electrostatically sensitive components.

Please, follow the instructions given in the safety hints.

To maintain contamination degree 2 acc. to EN 61010-1, the instrument must not be installed below contactors or similar units from which conducting dust or particles might trickle down.

3.1 Connectors

The four instrument connectors are of the plug-in type. They plug into the housing from top or bottom and click in position. Releasing the connectors should be done by means of a screwdriver.
Two connector types are available:

- Screw terminals for max. 2,5 mm^2 conductors
- Spring-clamp terminals for max. 2,5 mm^2 conductors



Before handling the connectors, the unit must be disconnected from the supply voltage.

Tighten the screw terminals with a torque of 0,5 - 0,6 Nm.

With spring-clamp terminals, stiff and flexible wires with end crimp can be introduced into the clamping hole directly. For releasing, actuate the (orange) opening lever.

Contact protection: Terminal blocks which are not connected should remain in the socket.

4 Electrical connections

4.1 Connecting diagram

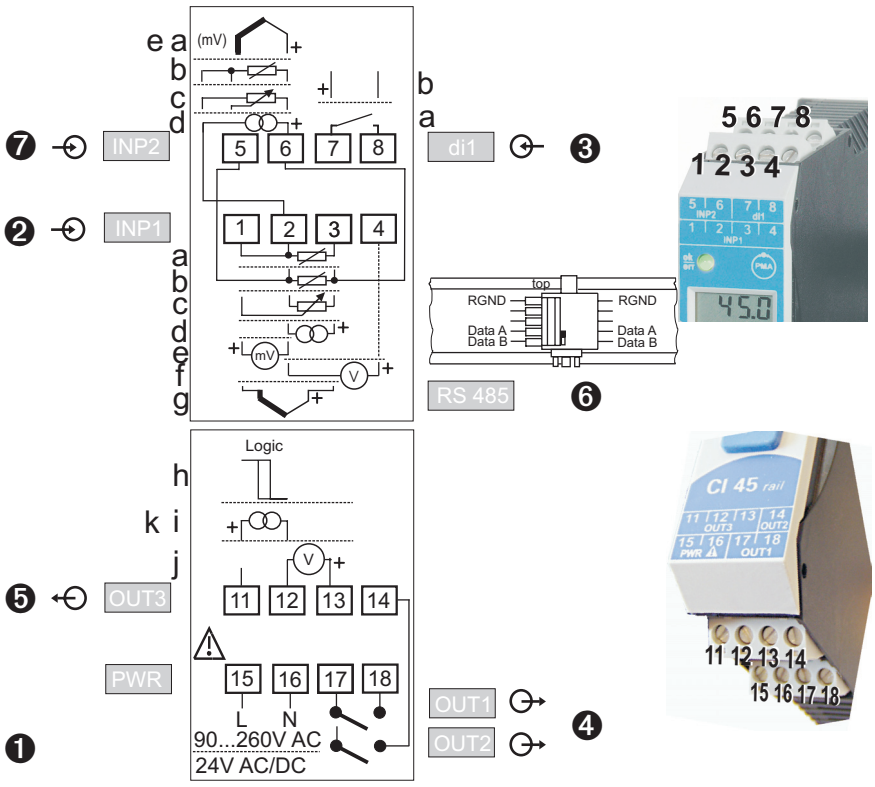

4.2 Terminal connections

Faulty connection might cause destruction of the instrument !

❶ Connecting the supply voltage

Dependend on order

- 90 … 260 V AC — terminal: 15, 16
- 24 V AC / DC — terminal: 15, 16

For further information, see section "Technical data"

Instruments with optional system interface:
Energization is via the bus connector of field bus coupler or power supply module. Terminals 15, 16 must not be used.

❷ Connecting input INP1

Input for the measurement value

a	resistance thermometer (Pt100/ Pt1000/ KTY/ ...), 3-wire connection	terminal: 1, 2, 3
b	resistance thermometer (Pt100/ Pt1000/ KTY/ ...), 4-wire connection	terminal: 2, 3, 5, 6
c	potentiometer	terminal: 1, 2, 3
d	current (0/4...20mA)	terminal: 2, 3
e	voltage (-2,5...115/-25...1150/-25...90/ -500...500mV)	terminal: 1, 2
f	voltage (0/2...10V/ -5...5V)	terminal: 2, 4
g	thermocouple	terminal: 1, 3

❸ Connecting input di1

Digital input,

a	control input (as a contact)	terminal: 7, 8
b	control input (as an opto-coupler)(optional)	terminal: 7, 8
c	counter input (optional)	terminal: 7, 8
d	frequency input (optional)	terminal: 7, 8

❹ Connecting outputs OUT1 / OUT2 (optional)

Relay outputs max. 250V/2A NO contacts with a common terminal.

- OUT1 terminal: 17, 18
- OUT2 terminal: 17, 14

❺ Connecting output OUT3

Universal output

h	logic (0..20mA / 0..11,5V)	terminal: 11, 12
i	current (0...20mA)	terminal: 11, 12
j	voltage (-10/0...10V))	terminal: 12, 13
k	transmitter power supply	terminal: 11, 12
l	frequency output	terminal: 12, 13

❻ Connecting the bus interface (optional)

RS 485 interface with MODBUS RTU protocol

* see interface description MODBUS RTU: (9499-040-72011)

❼ Connecting input INP2 (optional)

Input for the second variable INP2.

a	thermocouple	terminal: 5, 6
b	resistance thermometer (Pt100/ Pt1000/ KTY/ ...), 3-wire connection	terminal: 2, 5, 6
c	potentiometer	terminal: 2, 5 6
d	current (0/4...20mA)	terminal: 2, 6
e	voltage (-2,5...115/-25...1150/-25...90/ -500...500mV)	terminal: 5, 6

4.3 Connecting diagram

The instrument terminals used for the engineering can be displayed and printed out via BlueControl® (menu File \ Print preview - Connection diagram).

Example

Connecting diagram		
Connector 1		
Pin	**Name**	**Description**
1	INP1 TC-	Process value x1
2	INP2 PT RL	
3	INP1 TC+	
4	---	
5	INP2 PT-	Measurement
6	INP2 PT+	
7	+di1 opto	Frequency measurement
8	-di1 opto	

Connector 2		
Pin	**Name**	**Description**
11	---	
12	OUT3	Frequency
13	OUT3	
14	OUT2	Limit value 2 signalling, INP2 error signalling
15	NC	
16	NC	
17	OUT1 / OUT2	
18	OUT1	Limit value 1 signalling, INP1 error signalling

4.4 Connection examples

Example: Signal converter with output on indicator and alarm signal

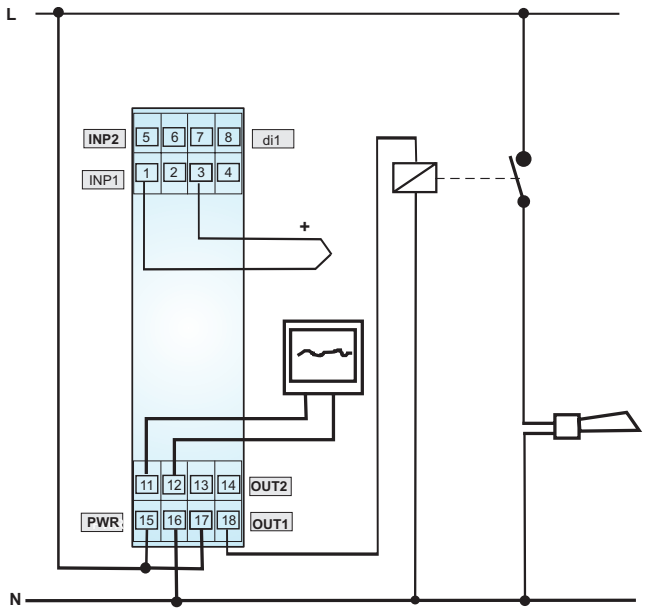

Example: RS 485 interface with RS 485-RS 232 converter
See documentation 9499-040-72011

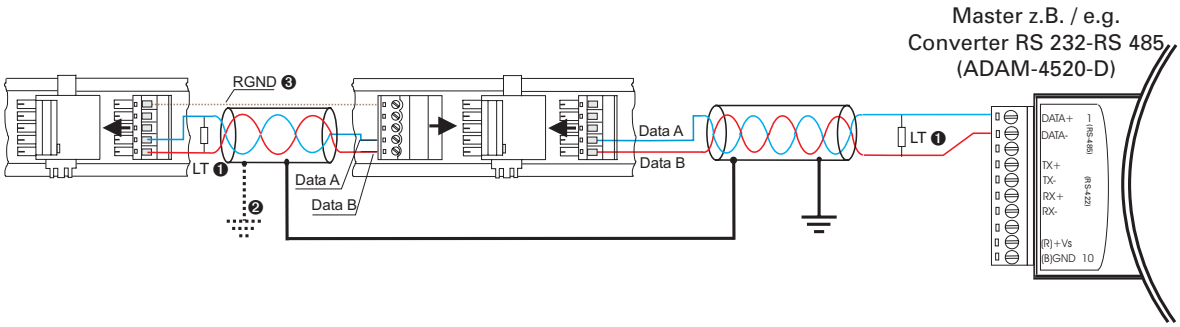

4.5 Hints for installation

- Measurement and data lines should be kept separate from control and power supply cables.
- Sensor measuring cables should be twisted and screened, with the screening connected to earth.
- External contactors, relays, motors, etc. must be fitted with RC snubber circuits to manufacturer specifications.
- The unit must not be installed near strong electric and magnetic fields.
- The temperature resistance of connecting cables should be selected in accordance with the local conditions.

The unit is not suitable for installation in explosion-hazarded areas.

Faulty connection can lead to the destruction of the instrument.

The measurement inputs are designed for measurement of circuits which are not connected directly with the mains supply (CAT I). The measurement inputs are designed for transient voltage peaks up to 800V against PE.

Please, follow the instructions given in the safety hints.

4.5.1 cULus approval

For compliance with cULus regulations, the following points must be taken into account:

- ❑ Use only copper (Cu) wires for 60 / 75 °C ambient temperature.
- ❑ The connecting terminals are designed for 0,5 – 2,5 mm² Cu conductors.
- ❑ The screw terminals must be tightened using a torque of 0,5 – 0,6 Nm.
- ❑ The instrument must be used exclusively for indoor applications.
- ❑ For max. ambient temperature: see technical data.
- ❑ Maximum operating voltage: see technical data.

5 Operation

5.1 Front view

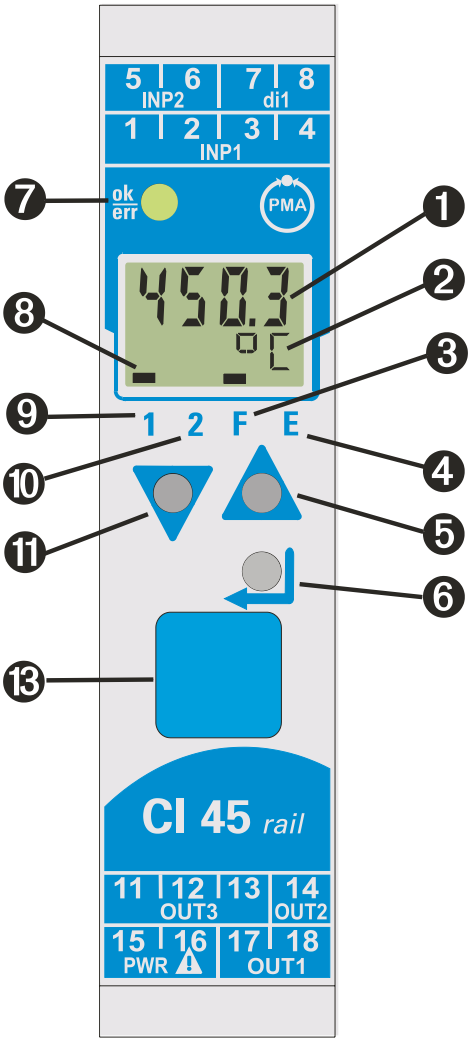

❶ Line 1: process value display
❷ Line 2: display of unit / extended operating level / error list / ConF and PArA level values
❸ Tare / sample & hold activated
❹ Error list (2 x ↵), e.g.
- FbF.x sensor fault INP. X
- ShL.x short circuit INP. X
- Pol.x wrong polarity INP. X
- Lim.x limit value alarm
- ...

❺ Increment key / slave pointer, maximum value
❻ Enter key to select extended operating level or error list
❼ LED indication of instrument status
- green: OK
- green blinking: no data exchange with bus coupler (only on instruments with optional system interface)
- red: limit value I triggered
- red blinking: instrument fault

❽ Display elements, active as bars
❾ Status of switching output OUT1 / INP1 active
❿ Status of switching output OUT2 / INP2 active
⓫ Decrement key / slave pointer, minimum value
⓭ PC connection for the **BlueControl**® engineering tool

The measurement value is displayed in LCD line 1. In the second line, the selected unit is displayed as standard. When changing over to the parameter setting, configuration or calibration level and at the extended operating level, the parameter name and value are displayed alternately.

⓭ : To facilitate withdrawal of the PC connector from the instrument, please, press the cable left.

5.2 Operating structure

The instrument operation is divided into four levels:

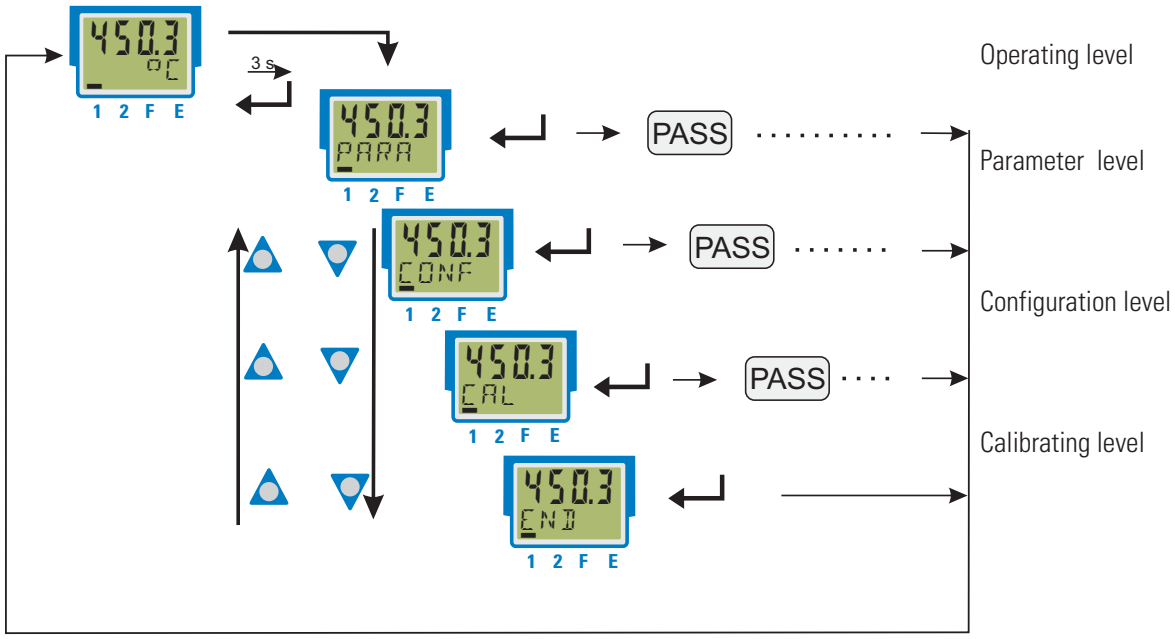

The access to the parameter, configuration and calibrating level can be disabled using the following two methods:

- Level disabling by adjustment in the engineering tool (lPar, lCnf, lCal). Display of disabled levels is suppressed.
- The access to a level can be disabled by entry of a pass number (0 … 9999). After entry of the adjusted pass number, all values of the level are available.
  With faulty input, the unit returns to the operating level.
  Adjusting the pass number is done via BlueControl®.

Individual parameters which must be accessible without pass number, or from a disabled parameter level, must be copied into the extended operating level.

Factory-setting: all levels are accessible without restrictions,
pass number PASS = OFF

PASS

5.3 Behaviour after supply voltage switch-on

After switching on the supply voltage, the instrument starts with the operating level.
The operating status is as before power-off.

5.4 Operating level

5.4.1 Display line1

The display value is the value resulting from function.1, function.2, function.3 handling.
It is also called process value (see also section/page 6-19.)

5.4.2 Display line 2

The value to be displayed continuously in the second LCD line can be selected via the **BlueControl®** engineering tool.
As default, the adjusted engineering unit is displayed.





❶	Engineering unit as default setting
❷	Display of output OUT3 in % (with corresponding scaling)

The values in display line 2 can only be displayed, but not changed.

Reset to display of the engineering unit is possible by deleting the entry for line 2..

With faulty input values, signals dependent on the inputs (e.g. Inp1, Inp2, display value, Out3) also indicate FAIL.

5.4.3 Switching over by means of the Enter key

By pressing key Enter, various values can be indicated on display line 2.

- ❶ Display of the defined display line 2 value (via BlueControl®); Limit value LC is set by default

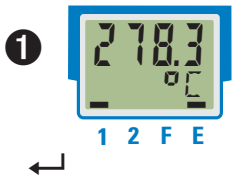

- ❷ Display of the error list, if it includes entries. With several inputs, the following value is displayed when pressing the Enter key.



- ❸ Display of the extended operating level, if entries were made. With several inputs, the following value is displayed when pressing the enter key.



- ❹ Return to the initial display
Unless a key is pressed during 30 s, the instrument returns to the initial display.

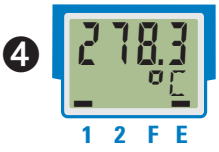

5.4.4 Slave pointer function

The minimum and maximum input values are stored in the unit.

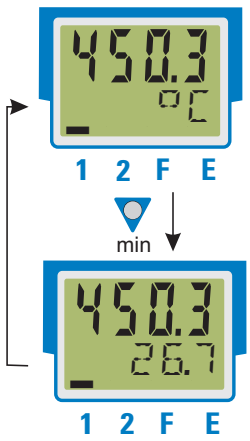	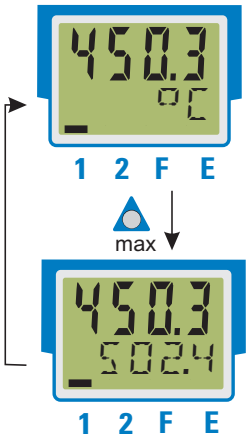
The minimum input value is displayed as long as key ▼ is pressed.	The maximum input value is displayed as long as key ▲ is pressed.

Deleting the minimum value
The minimum value is deleted by pressing key ▲ whilst key ▼ is kept pressed.
Whether the minimum value should be deleted also by the digital input (r ES.L) can be determined during configuration.
Deleting the maximum value
To delete the maximum value, press key ▼ whilst keeping key ▲ pressed.
Whether the maximum value should be deleted also by the digital input (r ES.H) can be determined during configuration.

Deleting the minimum and maximum values is possible also via interface.

When de-energizing UNIFLEX CI 45, the minimum and maximum values are deleted.

In case of error of the display value (e.g. input fail behaviour), the minimum and maximum values are also set to FAIL. When a valid value is displayed again, the minimum and maximum value are deleted.

5.4.5 Selecting the units

The unit to be displayed is determined via configuration I.Unt.

With selection "1 = temperature unit", the displayed unit is determined by configuration Unit with the relevant conversions for Fahrenheit and Kelvin.

By selecting I.Unt =22, display of any max. 5-digit unit or text can be determined.

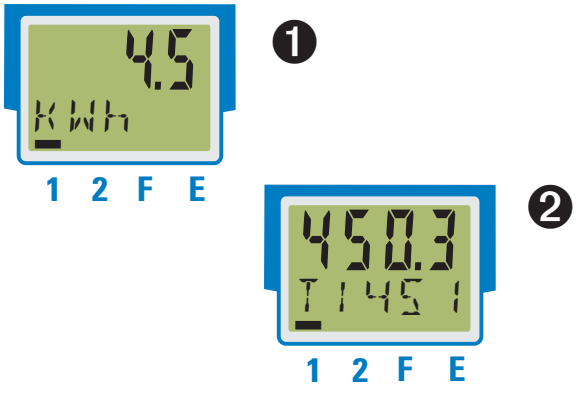

❶	Unit (example): kilowatt hour
❷	Text (example): TAG no.

5.4.6 Extended operating level

The operation of important or frequently used parameters and signals can be allocated to the extended operating level.

This facilitates the access, e.g. travelling through long menu trees is omitted, or only selected values are operable, the other data of the parameter level are e.g. disabled.

Display of the max. 8 available values of the extended operating level is in the second LCD line.

The content of the extended operating level is determined by means of the **BlueControl**® engineering tool. For this, select entry "Operation level" in the "Mode" selection menu. Further information is given in the on-line help of the engineering tool.

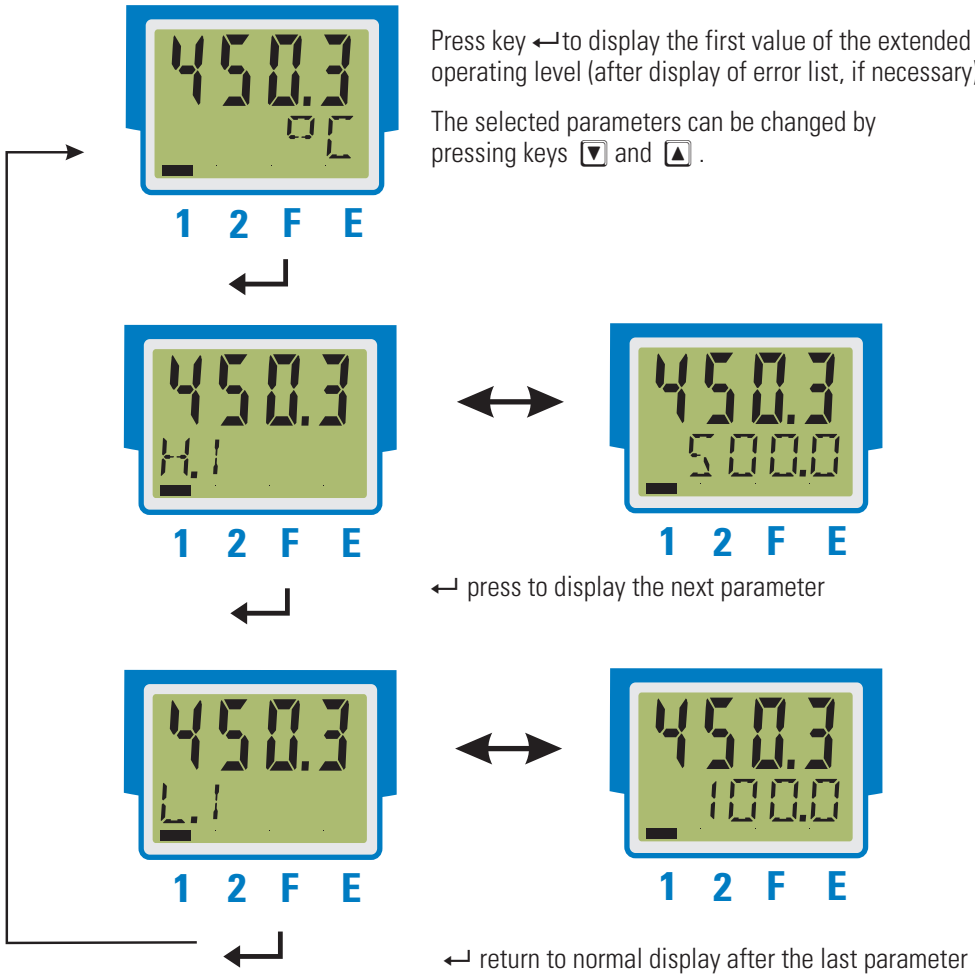

Unless a key is pressed within a defined time (timeout = 30 s), the operating level is displayed again.

6 Functions

The signal data flow of transmitter CI 45 is shown in the following diagram:

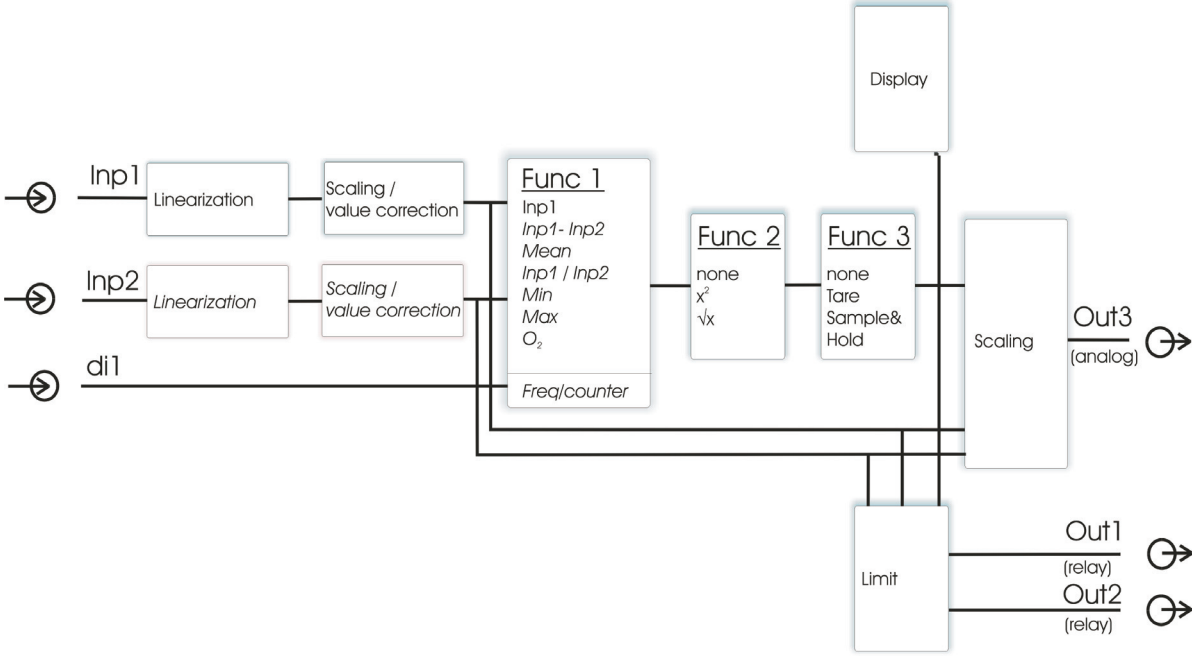

6.1 Linearization

The input values of input INP1 or INP2 can be linearized via a table.

By means of tables, e.g. special linearizations for thermocouples or other non-linear input signals, e.g. a container filling curve, are possible.

Table "L in" is always used with sensor type S.TYP= 18: "Special thermocouple" in INP1 or INP2, or if linearization S.Lin = 1: "Special linearization" are adjusted.

- The input signals must be specified in mV, V, mA, % or Ohm dependent on input type.
- For special thermocouples (S.tYP = 18), specify the input values in µV, and the output values in the temperature unit adjusted in U.LinT .
- For special resistance thermometer (KTY 11-6) (S.tYP = 23), specify the input values in Ohm, and the output values in the temperature unit adjusted in U.LinT.

Non-linear signals can be linearized using up to 32 segment points. Each segment point comprises an input (In.1 ... In.32) and an output (Ou.1 ... Ou.32). These segment points are interconnected automatically by straight lines. The straight line between the first two segment points is extended downwards and the straight line between the two highest segment points is extended upwards, i.e. a defined output value for each input value is provided.

With an In.x value switched to OFF, all further segments are switched off.

Condition for the input values is an ascending order.
In.1 < In.2 <...< In.32.

For linearization of special thermocouples, the ambient temperature range should be defined exactly, becauseit is used to derive the internal temperature compensation.

See also page 46.

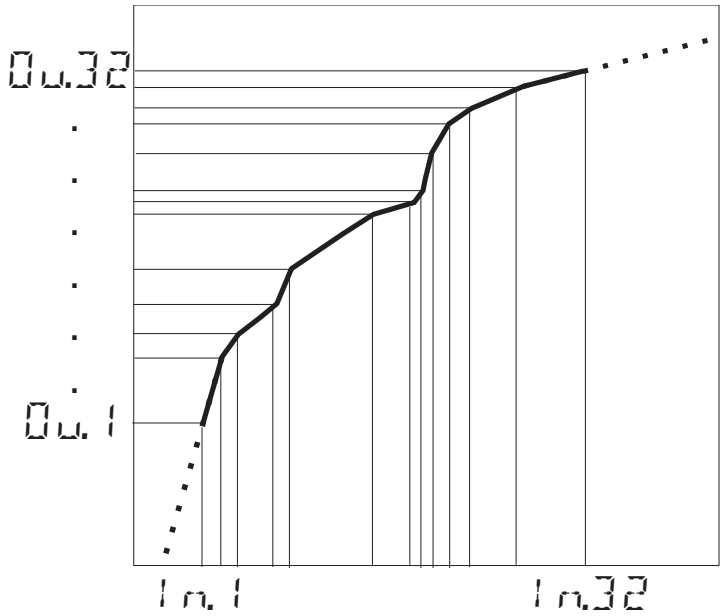

The same linearization table is used for input 1 and input 2.

6.2 Input scaling

Scaling of input values is possible. After any linearization, measurement value correction is according to the offset or two-point method.

When using current or voltage signals as input variables for InP.x, the input and display values should be scaled at the parameter level. Specification of the input value of the lower and upper scaling point is in units of the relevant physical quantity.

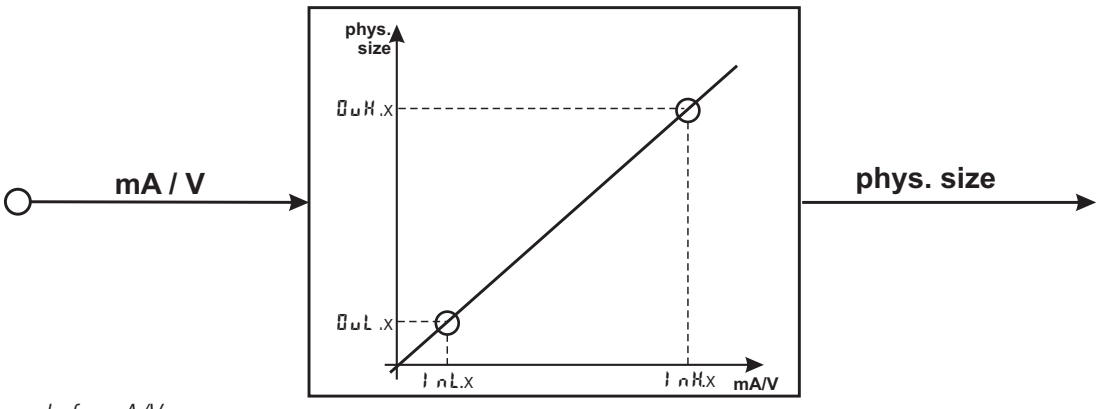

Example for mA/V

Parameters InL, 0uL, InH and 0uH are visible only with ConF / InP / Corr = 3 selected.

Parameters InL and InH determine the input range.

Example with mA:
InL = 4 and InH = 20 means that measuring from 4 to 20 mA is required (life zero setting).

For using the pre-defined scaling with thermocouples and resistance thermometers (Pt100), the settings for I.nL and O.uL as well as for I.nH and O.uH must correspond with each other.

For resetting the input scaling, the settings for I.nL and O.uL as well as I.nH and O.uH must correspond.

6.2.1 Input fail detection

For life zero detection of connected input signals, variable adjustment of the response value for FAIL detection is possible according to formula:

Fail response value ≤ *I.nL - 0,125 * (I.nH - I.nL)*

Example 1: I.nL = 4 mA, I.nH = 20 mA Fail response value ≤ 2 mA

Example 2: I.nL = 2 V, I.nH = 6 V Fail response value ≤ 1,5 V

6.2.2 Two-wire measurement

Normally, resistance and resistance thermometer measurement is in three-wire connection, whereby the resistance of all leads is equal.
Measurement in four-wire connection is also possible for input I. With this method, the lead resistance is determined by means of reference measurement.
With two-wire measurement, the lead resistance is included directly as a falsification in the measurement result. However, determination of the lead resistances by means of is possible.

Besides the connection of the both leads of the RTD / R sensor the 3rd connector has to be short-circuited.

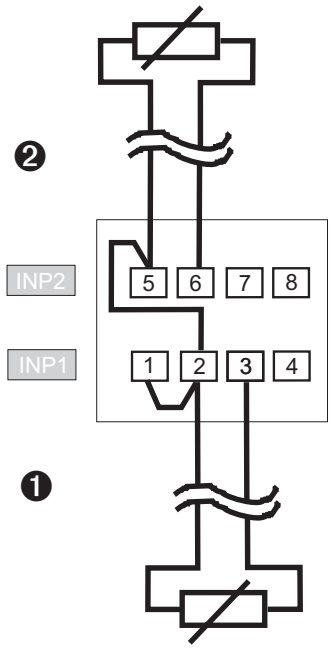

Procedure with Pt100, Pt1000

Connect a Pt100 simulator or a resistance decade instead of the sensor at the test point so that the lead resistance is included and calibrate the values by means of 2-point correction.

By means of measurement value correction the resulting temperature value will be corrected, but not the resistance input value. In this case the linearization error can increase.

Procedure with resistance measurement

Measure the lead resistance with an ohmmeter and subtract it from the measured value via the scaling.

6.2.3 Scaling with potentiometer measurement

With potentiometer measurement (SE.TYP = 50 … 53), a display value in 0% (lower stop value) to 100 % (upper stop value) is normally expected.

For this, 2-point calibration at calibrating level (→p. 49) Is necessary.

Turn your potentiometer to the lower stop and specify value “0” for O.uL .x. Now, turn the potentiometer to the upper stop and set value O.uH.x to “100”.

6.3 Temperature compensation, measured via INP2 (optional)

With thermocouple measurement via INP1, the required temperature compensation is possible by internal measurement of the compensation temperature via an external reference (external TC) or by measurement via INP2.

With TC measurement via INP2, the following settings must be done:

- setting in the function for: ConF /Func /Fnc.1 = 10
- input 1 for thermocouple input : ConF / InP.1 /SLYP =0 ... 18
- Switch on input 2 for measurement : ConF / InP.2 /I.Fnc = 1
- Select suitable sensor element for input 2: ConF / InP.2 /SLYP

Example:

– For saving compensating cable, or unless suitable cables for special thermocouples are available, the termperature at the thermocouple connecting terminal must be measured exactly by means of a resistance thermometer (e.g. Pt100).

Unless input 2 is enabled for measurement, the unit generates error E.3 (configuration error).

Please, note that there may be increased errors or even polarity errors with a thermocouple measuring range starting only at 0°C (32°F), when the outside temperature is low.

Connection example

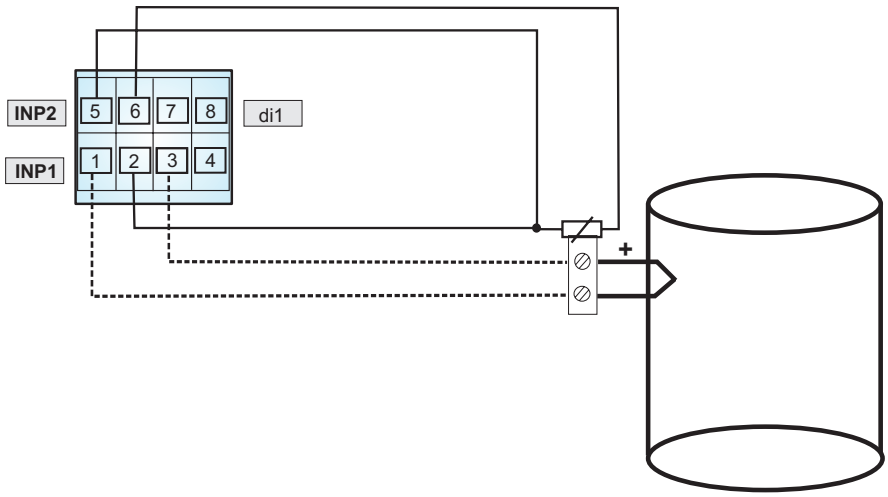

6.4 Filter

A 1st order mathematical filter with adjustable time constant and bandwidth is built in.

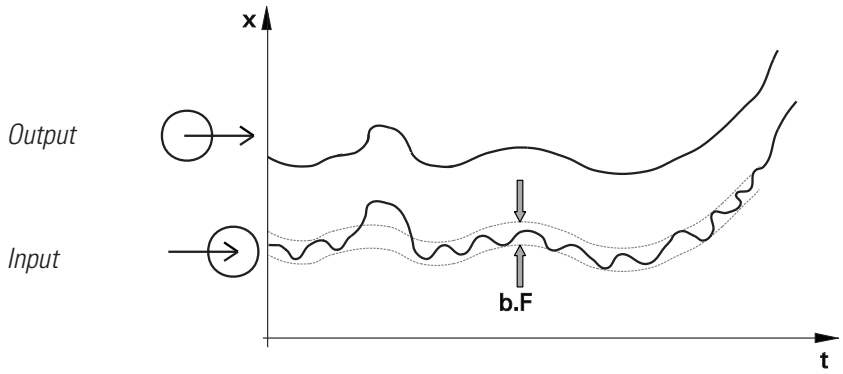

The filter bandwidth b.F x is the adjustable tolerance around the measured value within which the filter is active. Measurement value changes in excess of the adjusted bandwidth are not filtered.

6.5 Substitue value for inputs

If a substitute value for an input is activated, this value is used for further calculation with a sensor fault, independent of the selected input function. The selected controller output reaction on sensor fault, configuration FAIL, is omitted.

With factory setting, the substitute value is switched off.

Before activation of a substitute value In.F, the effect on the control loop must be considered.

6.6 Input forcing

Setting f.AIx = 1 (only via BlueControl®) can be used for configuring the input for value entry via the interface (=forcing).

Please, check the effect on the control loop in case of failure of input value / communication and exceeded measuring range.

6.7 O_2 measurement (optional)

This function is available only on instrument versions with INP2 .

Lambda probes (λ probes) are used as input signals. The electromotive force (in volt) delivered by lambda probes is dependent on the instantaneous oxygen content and on the temperature. Therefore, transmitter CI 45 can only display accurate measurement results, if the probe temperature is known.

Distinction of heated and non-heated lambda probes is made.
Signals from both types can be handled by CI 45.

Heated lambda probes

Heated λ probes are fitted with a controlled heating, which ensures a continuous temperature. This temperature must be specified in parameter Probe temperature in transmitter CI 45.
Parameters → Functions → Pro be temperature tEmP → ...°C (/°F/K - dependent on configuration)

Non-heated lambda probes

When the probe is always operated at a fixed, known temperature, the procedure is as with a heated probe.

A non-heated λ probe is used, if the temperature is not constant. In this case, the temperature in addition to the probe mV value must be measured. For this purpose, any temperature measurement with analog input INP2 can be used. During function selection, input INP2 must be set for measurement (CONF / InP.2 / I.Fnc = 1).

Configuration:
O_2-measurement must be adjusted in function 1 :

Func → Fnc.1	7	O2-measurement with constant probe temperature (heated probe)
	8	O2-measurement with probe temperature measurement (non-heated probe)

Connection

Connect the input for the lambda probe to INP1 . Use terminals I and 2.
If necessary, temperature measurement is connected to INP2.

Input 1 is used to adjust one of the high-impedance voltage inputs as sensor type:

InP.1→ S.TYP	41	special (-2,5...115 mV)
	42	special (-25...1150 mV)
	43	special (-25...90 mV)
	44	special (-500...500 mV)
	47	special (-200...200 mV)

These high-impedance inputs are without break monitoring. If necessary, input signal monitoring is possible via the limit values.

Further recommendations for adjustment:

Input 1 must be operated without linearization:

InP.1→ S.Lin	0	no linearization

With O2 measurement, specification if parameters related to the measured value should be output in ppm or % is required. This is done centrally during configuration.

othr → O2	0	Unit: ppm
	1	Unit: %

Whether the temperature of the non-heated λ probe is entered in °C, °F or K can be selected during configuration.

othr → Unit	1	°C
	2	°F
	3	K

Displays

With configuration for O_2 measurement (see above), the oxygen content is displayed as process value with the selected unit (see above) on line 1. Max. 4 characters can be displayed.

With display range overflow, "EEEE" is displayed .
Example: the ppm range is selected, but the value is a % value.
When exceeding the display span start, 0 is displayed.



Tip: the unit can be displayed on line 2.

6.8 Counter (optional)

Digital input di1 can be configured as a counter input (dependent on ordering code).

The function operating as a pulse counter is set as

- Up counter (ConF /CnFr /1.Fnc = 1,2)
- Down counter (ConF /CnFr /1.Fnc = 3,4)
- Active edge is configurable

The counter state is updated continuously in the background with the sample & hold function activated (→ p.) .

The counter state is not stored permanently. It is reset to the counter start value (Cnt.S) after supply voltage switch-on.

Up counter function

- The counter starts with start value Cnt.S, adjustable via ConF /CnFr /CntS.
- With every edge at input di1, the counter is incremented by 1.
- A counter end value can be defined via ConF /CnFr /CntE. Pulses in excess are not counted. With the counter end value switched off, incrementing is done up to the max. coun ter value.

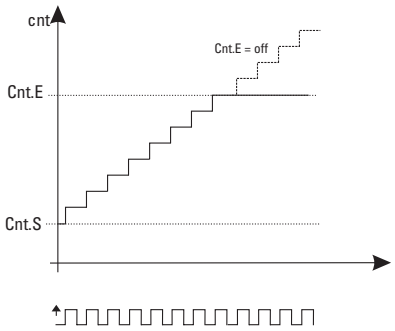

Please, note that the counter end value must be higher than the counter start value (Cnt.E > Cnt.S).

Down counter

- The counter starts at counter start value Cnt.S, adjustable via ConF /CnFr /CntS.
- The counter is decremented by 1 with every edge at input di1.
- The counter end value can be defined via ConF /CnFr / CntE. Pulses in excess are not counted. With the counter end value switched off, decrementing is done down to 0.

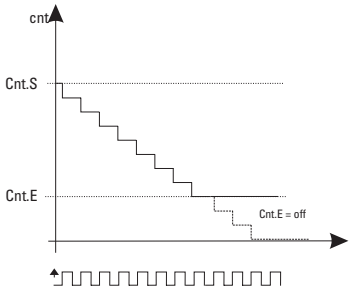

Note that the counter end must be set to a lower value than the counter start (Cnt.S > Cnt.E)

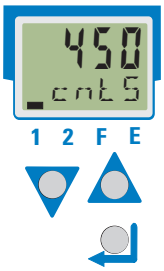

Resetting the counter

The counter can be reset to the start value by

- Reset via key combination Enter + increment key
  (keep the Enter key pressed and actuate the increment key)
- An activated limit value Lim1 … Lim3.

Tip: When resetting the counter via a limit value, cyclic counting can be realized. Thereby, a pulse divider is created when the limit value is provided at an output.

Counter divisor

The incoming pulses can be stepped down using parameter `Cnt.d` . This function is used for

- Scaling the display range, e.g. to prevent display overflow, or for
- Display value dimensioning.

With a counter divisor of 1000.0 and integration of the least significant digits of the counter value at extended operating level, e.g. value 9999.9999 can be displayed.

Example:

- Adjusted counter divisor Cnt.d = 100.0 (100 pulses increment the process value by 1)
- Line 1: process value display
- Line 2: display of the least significant digits of the counter value (Cnt.L) at extended operating level
- Example value: 24 / 56 = 24x 100 + 56 = 2456



Display overflow

An overflow of the display range is shown by `EEEE` on the display. Hoverever, the unit continues incrementing until reaching the maximum counter width.

Simulation

For simulation of the counter input in the BlueControl® engineering tool, a counter pulse can be simulated using the checkbox of digital input di1 or via input window “Freq”. The input value must be specified in kHz.

6.9 Frequency input (optional)

Digital input di1 can be configured as a frequency input (dependent on ordering code). The frequency is a function of the number of pulses counted during the gate time.

The display value is updated at the earliest after elapse of the gate time.

Settings:

- Frequency measurement (`ConF /CnFr /1.Fnc =5`)
- Gate time (`ConF /CnFr /Fr 9L`)

During frequency measurement, measurements can be realized, monitored and output via universal inputs INP1 / INP2, if necessary.

Scaling

The frequency input value can be scaled to a physical value in two points.
1st value:
- input Fr 9.L (value specified in kHz)
- physical value Ou.L

2nd value:
- input Fr 9.H (value specified in kHz)
- physical value Ou.H

Example:

5 Hz ≙ 2 l/min
20 Hz ≙ 30 l/min
Settings: Fr 9.L = 0,002; Ou.L = 5
Fr 9.H = 0,020; Ou.H = 30

Filter

The frequency input value can be filtered (Parameter Fr 9.F).

Exceeded frequency range

When exceeding the frequency input range end, measurements are switched off during approx. 1 s.

Out-of-range signalling is possible via an output signal: ConF /Out.x /FA1.F = 1

Simulation

A special "Freq" input window is provided for simulation of the frequency input in the BlueControl® engineering tool. It should be specified in kHz.

6.10 Arithmetic functions

The following arithmetic functions are available in configuration setting CONF /Fnc.2 :

Square function

- Formula: x^2

The display value which is squared is output.

Square root extraction

- Formula: $\sqrt{x}$

For output, the square root of the display value is extracted.
For values $x \leq 0$, value 0 is output.

6.11 Tare function (optional)

Switching on the tare function sets the instantaneous input value to zero and measurement is continued with this offset. By switching off the tare function, the actual measurement value is displayed again.

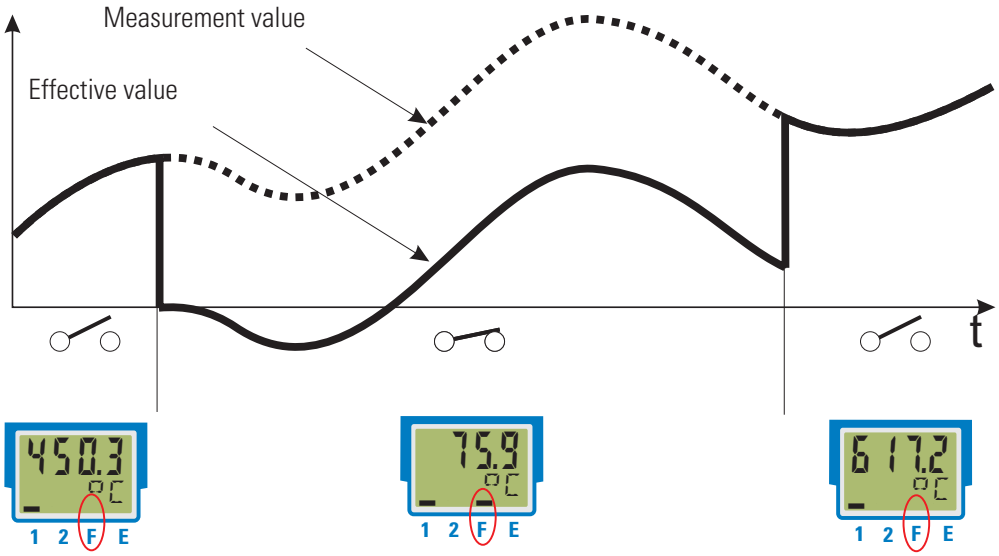

The tare function is enabled during configuration (Func → Fnc.3 = 1).
Dependent on configuration, the tare function can be activated by digital input di1 or interface (LOGI → LArA).
An active tare function is displayed as an active bar for display element 'F'.

6.12 Sample&hold amplifier (optional)

With the sample & hold function activated, the measured value is held on the display. After de-activating the sample & hold function, the actual measurement value is displayed again.

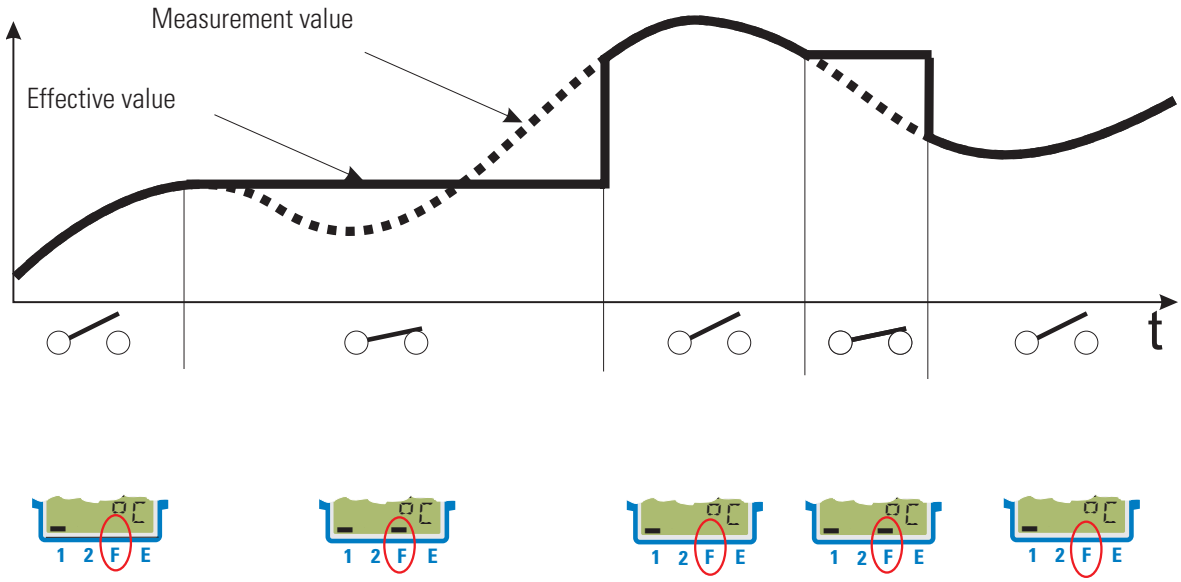

The sample&hold amplifier function can be activated during configuration (Func → Fnc.3 = 2).
Dependent on configuration, the sample&hold function can be made effective via digital input di1 or via the interface (LOGI → HOLd).
An active sample&hold amplifier function is displayed as an active bar for display element 'F'.

6.13 Integrator function

The input signal can be totalized by means of a selectable integrator (ConF \Func \Fnc.3 = 3).

Function:

Integrator with adjustable time constant (PAr A \Func \t.I) [specified in minutes] and adjustable input offset (PAr A \Func \P.I)

Formula:

$$y(t) = y(t-Tr) + Tr/t * (x + P.I)$$

y(t) = integrator output
y(t-Tr) = integrator output of the last cycle
Tr = cycle time (100ms INP1, 140ms INP1 + INP2)
t = time constant
x = integrator input
P.I = input offset (zero offset)

With a constant input value, the integrator output reaches the specified value after elapse of the adjusted time constant t.I.

Reset:

Dependent on selection (ConF\Log\r ES.I), the integrator can be reset via:

- Digital input di1
- Key combination Enter + increment key
  (keep the Enter key pressed and actuate the increment key)
- Limit values Limit1 to Limit3

Example 1:

A flow in m^3/h is measured. The integrator should measure the overall flow quantity. The measured flow is related to time unit hours, i.e. time constant t.I = 1 hour = 60 min must be used. Parameter P.I can be used for zero correction.

Example 2: pulse output

The integrator is activated. The resulting process value is monitored using a limit value (without memory) , e.g. Lim1. Lim.1 is defined as integrator reset function. Limit value Lim.1 is output e.g. on ouput 1 (OUT.1).
When exceeding limit value Lim1, there is a signal change at OUT1 during a period (100ms INP1, 140ms INP1 + INP2).

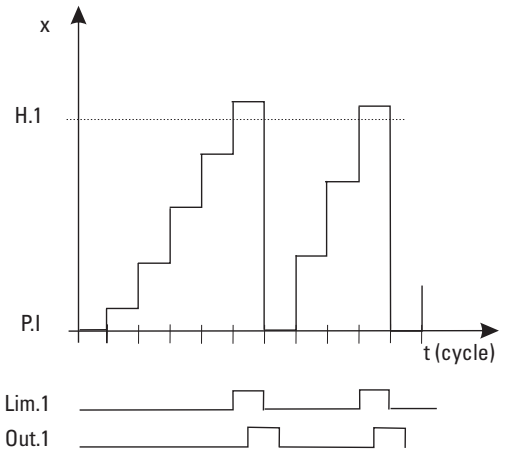

6.14 Limit value processing

Max. three limit values can be configured for the outputs. Generally, each one of outputs Out.1... Out.3 can be used for limit value or alarm signalling. Several signals allocated to an output are linked by a logic OR function.

6.14.1 Measured value monitoring

The signal to be monitored can be selected separately for each alarm in the configuration. The following signals are available:

- Process value (display value)
- Measurement value INP1
- Measurement value INP2 (option)
- Counter / frequency measurement value (optional)

Each of the 3 limit values LIm.1 ... LIm.3 has 2 trigger points H.x (Max) and L.x (Min), which can be switched off individually (parameter = "OFF"). The hysteresis HYS.x of each limit value is adjustable.

Input value monitoring

Input value monitoring is as shown below:

Operating principle with absolute alarm (ex. Lim.1)

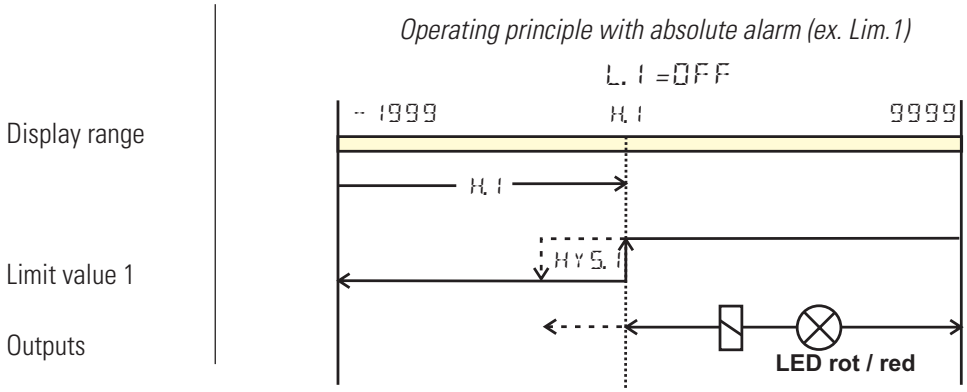

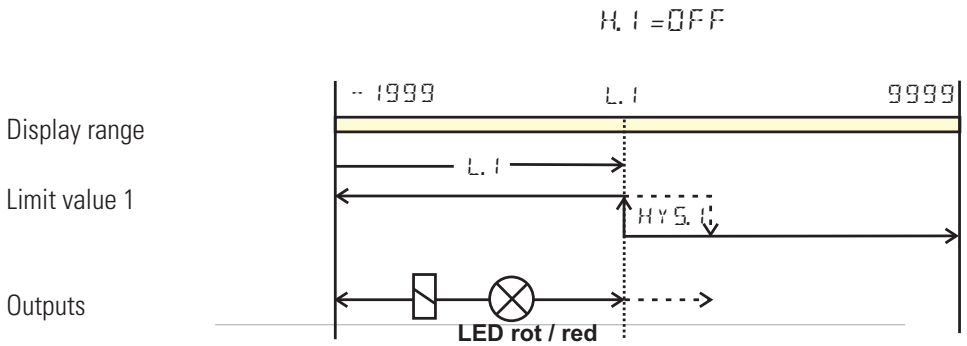

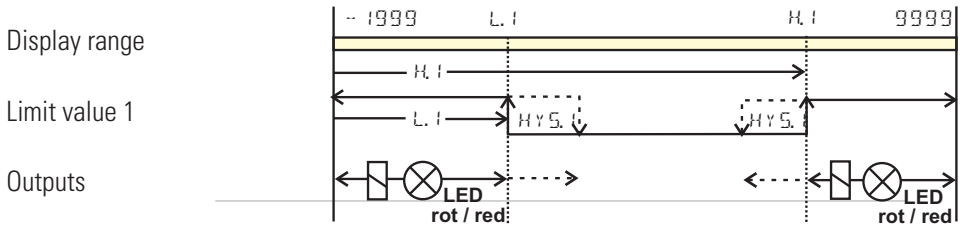

Normally open: (ConF / OuL.x / OAcL =0) (as shown in the example)
Normally closed: (ConF / OuL.x / OAcL = 1) (inverted output relay action)

Alarm delay

An alarm can become effective with a delay: the alarm output is set only after elapse of the adjusted delay time, provided that the limit value is still exceeded. Shorter alarms than the adjusted delay are ignored.

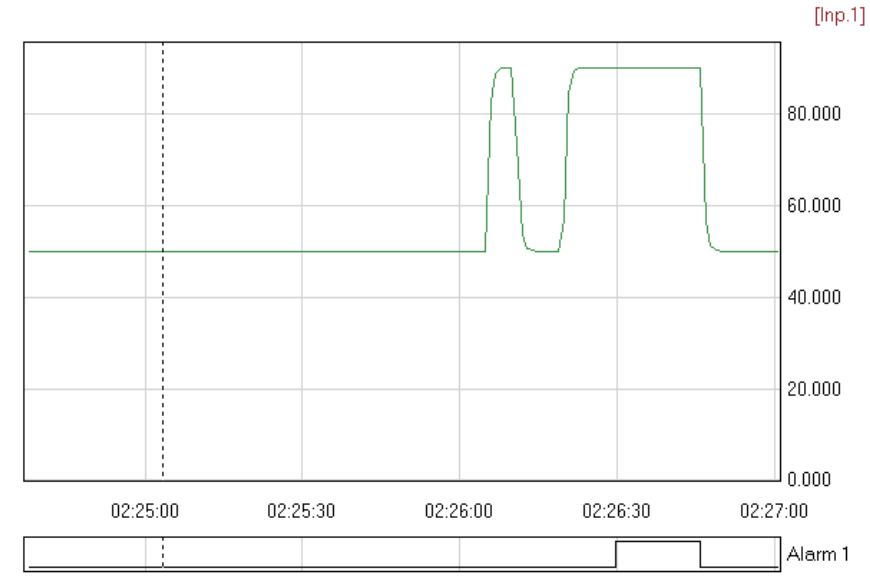

Example: Alarm delay

Signal change monitoring

Another limit value processing function is signal change monitoring (per minute).

Behaviour with signal change (Ex. Lim1)

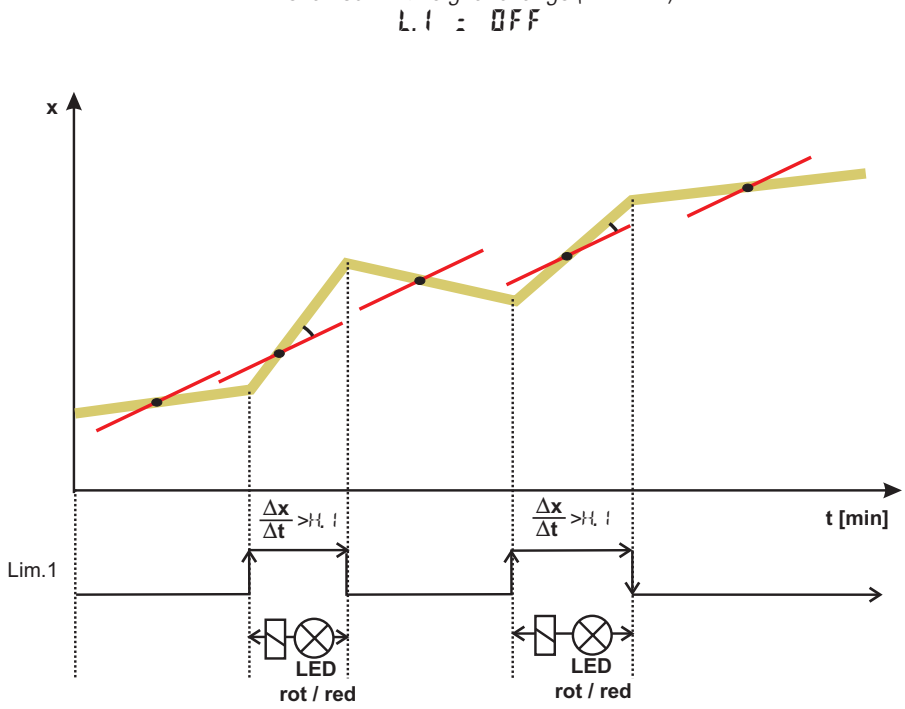

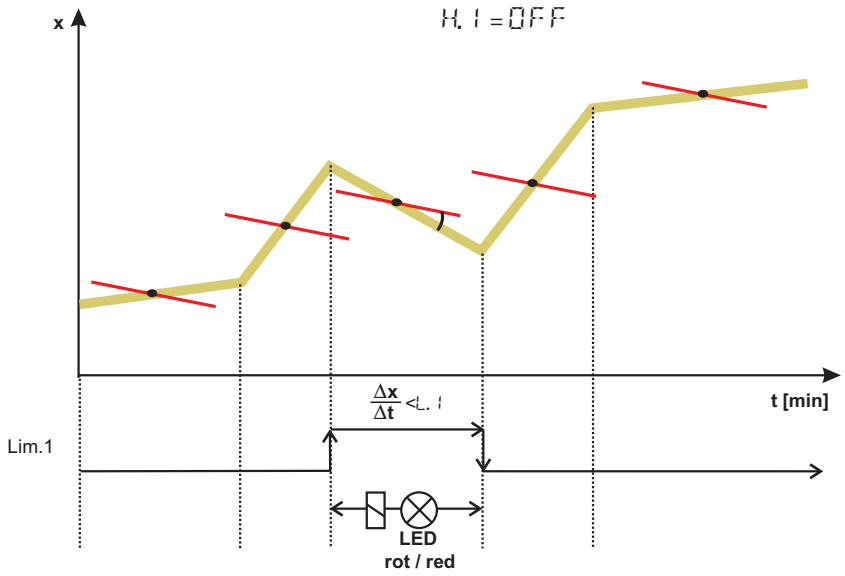

With measurement value or signal change with latch selected (ConF /Lim /Fnc.x = 2, 4), the alarm relay remains set, until the alarm was reset in the error list, via di1 or via the interface (Lim1 ... Lim3 = 1).
For this, reset value 0 must be specified in the error list or via the interface.

After power on or an engineering download an used input filter has an effect on the gradient of the input signal. Therefore a valid alarm monitoring can only be processed after a certain rise up time. This time depends on the value of the filter time constant t.F.
For t.F = 0 the monitoring results are valid immediately.

6.14.2 Monitoring the number of operating hours and switching cycles

Operating hours

The number of operating hours can be monitored. When reaching or exceeding the adjusted value, signal InF.1 is activated (in the error list and via an output, if configured).

The monitoring timer starts when setting limit value C.Std. Reset of signal InF.1 in the error list will start a new monitoring timer. Monitoring can be stopped by switching off limit value C.Std.

Adjusting the limit value for operating hours C.Std can be done only via BlueControl®.
The current counter state can be displayed in the BlueControl® expert version.

The number of operating hours is saved once per hour. Intermediate values are lost when switching off.

Number of switching cycles

The output number of switching cycles can be monitored. When reaching or exceeding the adjusted limit value, signal InF.2 is activated (in the error list and via an output, if configured).

The monitoring timer starts when setting limit value C.Sch. Reset of signal InF.2 in the error list will start a new monitoring timer. Monitoring can be stopped by switching off limit value C.Sch.

A switching cycle counter is allocated to each output. Limit value C.Sch acts on all switching cycle counters.

Adjusting the limit value for the number of switching cycles C.Sch can be done only via BlueControl®.
The current counter state can be displayed in the BlueControl® expert version.

The number of switching cycles is saved once per hour. When switching off, intermediate values are lost.

6.15 Analog output configuration

6.15.1 Analog output

The two output signals (current and voltage) are available simultaneously. Adjust ConF / Out.3 / O.tYP to select the output type which should be calibrated.

ConF / Out.3:	O.tYP	= 1	Out.3 0...20mA continuous
		= 2	Out.3 4...20mA continuous
		= 3	Out.3 0...10V continuous
		= 4	Out.3 2...10V continuous

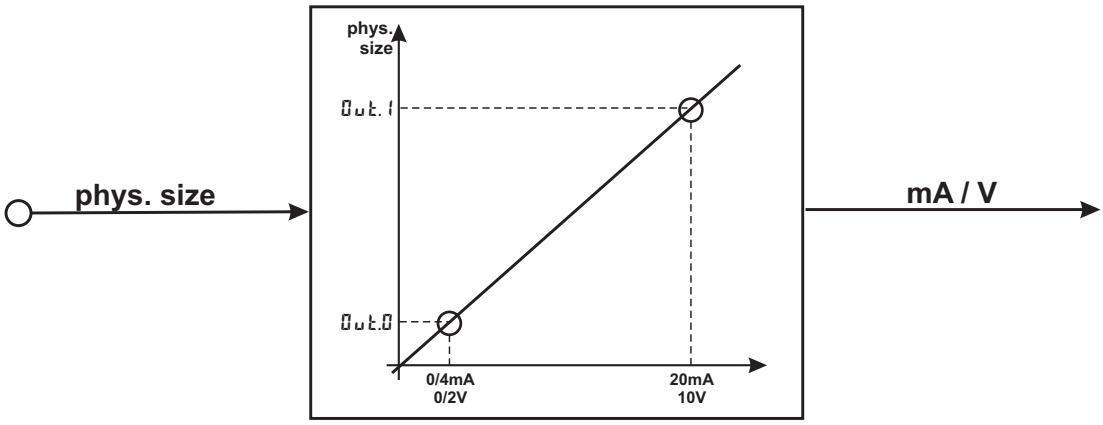

Parameter O.Src defines the signal source of the output value.

Example:

O.Src	=	3	signal source for Out.3 is the process value

Scaling of the output range is done via parameters Out.0 and Out.1. The values are specified in units of the physical quantity.

Out.0	=	-1999...9999	scaling Out.3 for 0/4mA or 0/2V
Out.1	=	-1999...9999	scaling Out.3 for 20mA or 10V

Example: output of the full input range of thermocouple type J (-100 … 1200 °C)

Out.0 = -100
Out.1 = 1200

Example: output of a limited input range, e.g. 60.5 … 63.7 °C)

Out.0 = 60.5
Out.1 = 63.7

Please, note: the smaller the span, the higher the effect of input variations and resolution.

Using current and voltage output in parallel is possible only in galvanically isolated circuits.

Configuration O.tYP = 2 (4 … 20mA) or 4 (2...10V) means only allocation of the reference value (4 mA or 2V) for scaling of output configuration Out.0. Therefore, output of smaller values is also possible rather than output limiting by reference value 4mA / 2V.

Configuration O.tYP = 0/1 (0/4...20mA) or 2/3 (0/2...10V) determines, which output should be used as a calibrated reference output.

6.15.2 Logic output

The output can be used also as a logic output (OUT TYP = 0). In this case, e.g. alarms or limit values can be output.

6.15.3 Transmitter power supply

Two-wire transmitter power supply can be selected by adjusting OUT TYP = 5.
In this case, the analog output of UNIFLEX CI 45 is not available any more, but the input signal can be monitored or read out via the interface.
Connection example:

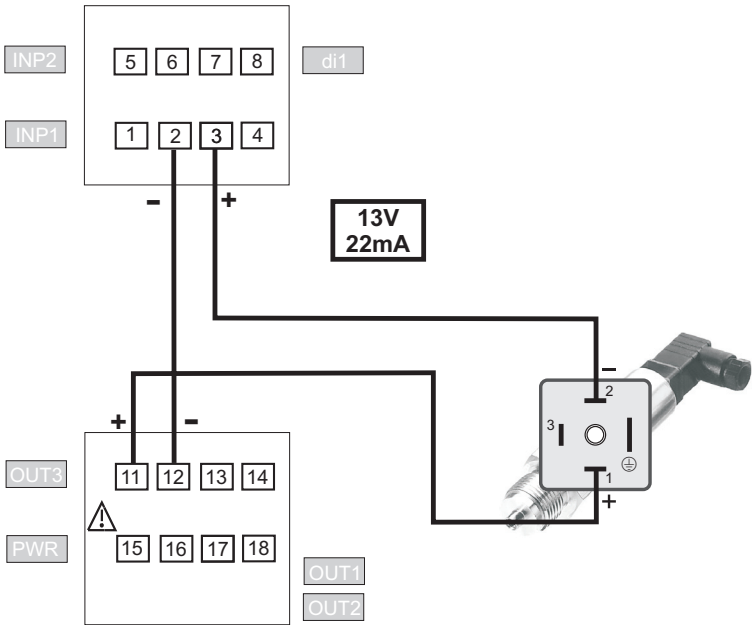

6.15.4 Frequency output (optional)

The analog output signal for voltage can be selected also as a frequency output with setting:

ConF / Out.3: O.typ = 6 Out.3 0...10V frequency output

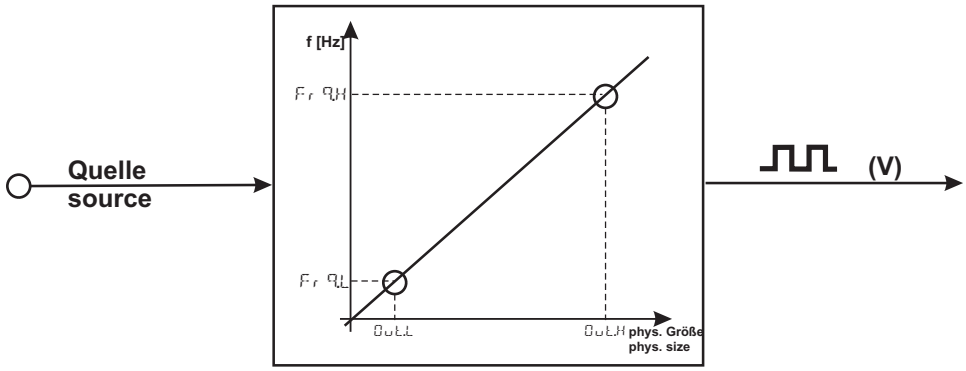

Setting O.Src defines the signal source of the frequency output value.

Example: O.Src = 3 signal source for Out.3 is the process value

Output range scaling is done via parameter pairs Out.L / Fr.gL and Out.H / Fr.gH. Values Out.L and Out.H are specified in physical units, Fr.gL and Fr.gH are specified in Hz.

Example:
20°C ≙ 5 Hz
200°C ≙ 500 Hz
Settings: Ou.L = 20; Fr.gL = 5,0
Ou.H = 200; Fr.gH = 500,0

The output behaviour in case of input value error can be defined via O.FAI .

Please, note that the lower the span the higher the effect of input variations and resolution steps

Signals exceeding the permissible frequency range cause deviations from the square shape of frequency waves.

6.15.5 Analog output forcing

By adjusting f.Out = 1 (only via BlueControl), the output can be configured for value input via interface, or by means of an input value at extended operating level (=Forcing).

This setting can be used also for e.g. testing the cables and units connected in the output circuit.

This function can also realize a setpoint potentiometer.

6.16 Maintenance manager / error list

In case of one or several errors, the error list is always displayed at the beginning of the extended operating level .
A current input in the error list (alarm or error) is always indicated by display of letter E .

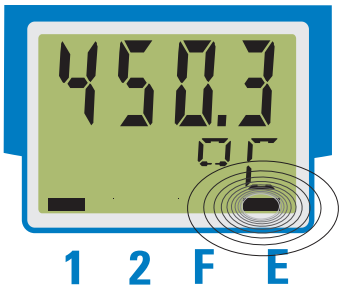

For display of the error list, press key ↵ once.

E- display element	Signification	Further procedure
blinks	Alarm is pending, error	- The error number in the error list indicates the error type -Remove the error.
on	Error was removed, alarm not acknowledged	- Acknowledge the error in the error list by pressing ▲ or ▼ - key. - The alarm entry is deleted.
off	No error, all alarm entries are deleted	

Error list:

Name	Description	Cause	Possible remedial action
E.1	Internal error, cannot be corrected	E.g. defective EEPROM	Contact PMA service Return instrument to manufacturer
E.2	Internal error, resettable	E.g. EMC trouble	Keep measuring and supply cables separate. Protect contactors by means of RC snubber circuits
E.3	Configuration error, resettable	Missing or faulty configuration	Check interdependencies for configurations and parameters
E.4	Hardware error	Code number and hardware not identical	Contact PMA service Replace electronics/options card
FbF.1	INP1 sensor break	Defective sensor Wiring error	Replace INP1 sensor Check INP1 connection
ShL.1	INP1 short circuit	Defective sensor Wiring error	Replace INP1 sensor Check INP1 connection
POL.1	INP1 polarity error	Wiring error	Change INP1 polarity
FbF.2	INP2 sensor break	Defective sensor Wiring error	Replace INP2 sensor Check INP2 connection
ShL.2	INP2 short circuit	Defective sensor Wiring error	Replace INP2 sensor Check INP2 connection
POL.2	INP2 polarity error	Wiring error	Change INP2 polarity
Lim.1	Latched limit value alarm 1	Adjusted limit value 1 exceeded	Check process
Lim.2	Latched limit value alarm 2	Adjusted limit value 2 exceeded	Check process
Lim.3	Latched limit value 3	Adjusted limit value 3 exceeded	Check process
InF.1	Time limit value message	Preset number of operating hours reached	Application-specific
InF.2	Switching cycle message (digital outputs)	Preset number of switching cycles reached	Application-specific

Latched alarms Lim1/2/3 (E element displayed) can be acknowledged, i.e. reset via digital alarm di1.

For Configuration, see page 46: ConF /LOG1 /Err.r

When an alarm is still pending, i.e. unless the error cause was removed (E display blinks), latched alarms cannot be acknowledged and reset.

Error-state	Signification	
2	Pending error	Change to error status 1 after error removal
1	Stored error	Change to error status 0 after acknowledgement in error list 0
0	no error/message	Not visible, except during acknowledgement

If sensor errors should not be on the error list any more after error correction without manual reset in the error list, suppression via BlueControl is possible by means of setting ILat.

CONF / othr / ILat	1	blocked

This setting is without effect on limit values Lim.1 … 3 configured for storage.

6.17 Reset to factory setting

In case of faulty configuration, UNIFLEX CI 45 can be reset to its factory setting.

① For this, the operator must keep the keys increment and decrement pressed during power-on.
② For confirmation, press key increment to select YES
③ Confirm factory resetting with Enter and the copy procedure isl started (display COPY).
④ Afterwards the device restarts.

In all other cases, no reset will occur(timeout abortion).

❶ ▲ ▼ + Power on





❷ ▲



❸ ↵



❹

If one of the operating levels was blocked, reset to factory setting is not possible.

If a pass number was defined (via BlueControl®) but no operating level was blocked, enter the correct pass number when prompted in ❸. A wrong pass numbers aborts the reset action.

The copy procedure (COPY) can take some seconds.

Now, the transmitter is in normal operation.

7 Configuration level

7.1 Configuration survey

Dependent on the device version and further adjusted configurations, configurationdata can be hidden.
Data operable via the instrument front panel are shown in the following figure.

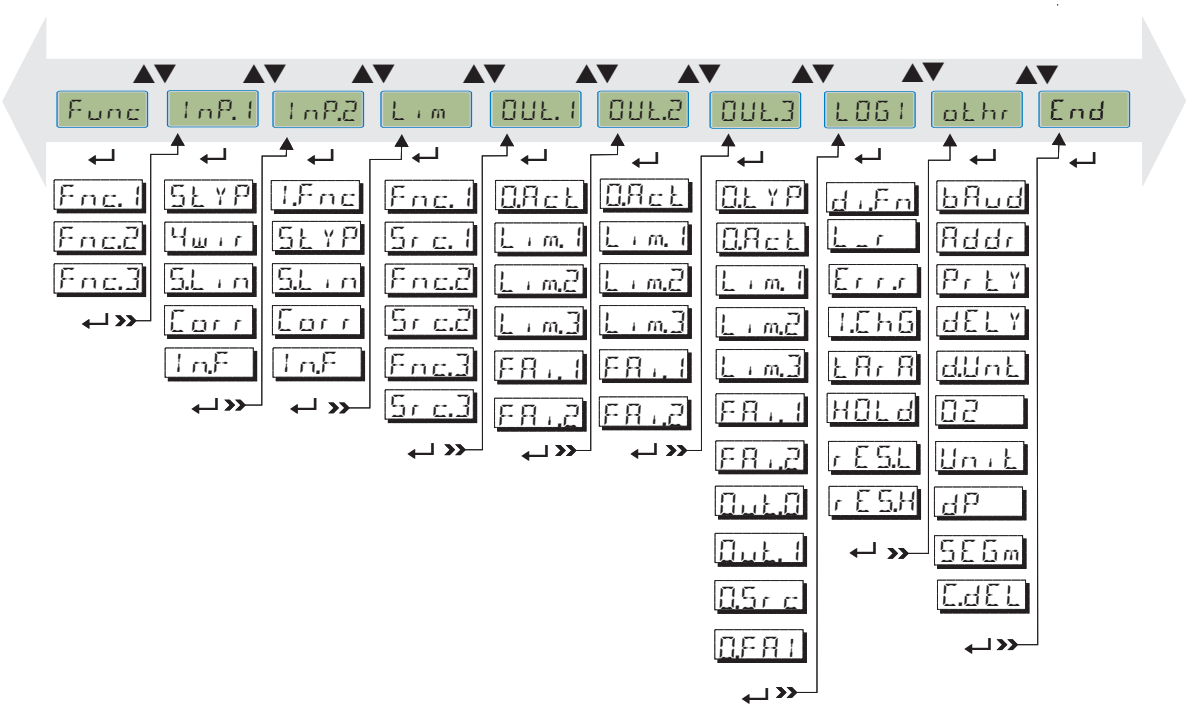

Setting:

- The configurations can be adjusted by means of keys ▲▼ .
- Transition to the next configuration element is by pressing key ↵!
- After the last configuration of a group, domE is displayed and an automatic change to the next group is made.

Return to the start of a group is by pressing key ↵during 3 sec.

With configuration changes, please, check all dependent parameters for validity.

7.2 Configurations

Dependent on instrument version and configuration settings, display of values which are not required is suppressed.

✪ The entries marked with this symbol are selectable only, if the instrument option is fitted.

Function selection Func

Name	Value range	Description	
Fnc.1		Function 1 ✪	
	0	Process value = INP1	
	2	Difference (INP1 -INP2)	
	3	Max (INP1, INP2)	
	4	Min (INP1, INP2)	
	5	Mean value (INP1, INP2)	
	6	Switch-over (INP1, INP2)	
	7	O_2-Function with constant probe temperature	
	8	O_2-Function with measured probe temperature	
	9	Counter / frequency	
	10	Process value = INP1 (TC of INP2)	
Fnc.2		Function 2	
	0	No function	
	1	Squarer	
	2	Square root	
Fnc.3		Function 3 ✪	
	0	No function	
	1	Tare	
	2	Sample & Hold	

Inputs InP.1 and InP.2 (✪)

Name	Value range	Description	
1.Fnc		Input function (✪ with 2nd universal input only)	
	0	No measurement	
	1	measurement	
SEnS		Sensor type	
	0	Thermocouple type L (-100...900°C), Fe-CuNi DIN	
	1	Thermocouple type J (-100...1200°C), Fe-CuNi	
	2	Thermocouple type K (-100...1350°C), NiCr-Ni	
	3	Thermocouple type N (-100...1300°C), Nicrosil-Nisil	
	4	Thermocouple type S (0...1760°C), PtRh-Pt10%	
	5	Thermocouple type R (0...1760°C), PtRh-Pt13%	
	6	Thermocouple type T (-200...400°C), Cu-CuNi	
	7	Thermocouple type C (0...2315°C), W5%Re-W26%Re	
	8	Thermocouple type D (0...2315°C), W3%Re-W25%Re	
	9	Thermocouple type E (-100...1000°C), NiCr-CuNi	
	10	Thermocouple type B (0/100...1820°C), PtRh-Pt6%	
	18	Special thermocouple (linearization necessary)	
	20	Pt100 (-200.0 ... 100,0 °C) (150°C with reduced lead resistance)	
	21	Pt100 (-200.0 ... 850,0 °C)	
	22	Pt1000 (-200.0...850.0 °C)	
	23	Special 0...4500 Ohm (preset KTY11-6)	

Name	Value range	Description	
	24	Special 0...450 Ohm	
	25	Special 0...1600 Ohm	
	26	Special 0...160 Ohm	
	30	0...20mA / 4...20 mA	
	40	0...10V / 2...10 V (Inp.1 only)	
	41	Special (-2,5...115 mV)	
	42	Special (-25...1150 mV)	
	43	Special (-25...90 mV)	
	44	Special (-500...500 mV)	
	45	Special (-5...5 V) (Inp.1 only)	
	46	Special (-10...10 V) (Inp.1 only)	
	47	Special (-200..200 mV)	
	50	Potentiometer 0...160 Ohm	
	51	Potentiometer 0...450 Ohm	
	52	Potentiometer 0...1600 Ohm	
	53	Potentiometer 0...4500 Ohm	
4wire		Resistance connection type (Inp.1 only)	
	0	3-wire connection	
	1	4-wire connection	
SLin		Linearization only adjustable with SLTYP:18, 23 ... 47	
	0	none	
	1	Special linearization. Producing a linearization table is possible via BlueControl (Engineering-Tool). Preset is the characteristic for KTY 11-6 temperature sensors.	
Corr		Measured value correction / scaling	
	0	No correction	
	1	Offset correction (at CAL -level)	
	2	2-point correction (at CAL -level)	
	3	Scaling (at PArA -level)	
InF	OFF, -1999...9999	Substitute value in case of a fault. This value is used for calculations, if there is a fault at the input (e.g. FAIL).	
fAI1 (fAI2)		Forcing of analog input INP1, INP2 ✪ (only visible with BlueControl!)	
	0	Not active	
	1	The value for this analog input is preset via interface	

Counter / frequency input ✪

Name	Value range	Description	
I.Fnc		Function selection ✪	
	0	Control input	
	1	Up counter, positive edge	
	2	Up counter, negative edge	
	3	Down counter, positive edge	
	4	Down counter, negative edge	
	5	Frequency measurement	
FrGt	0,1 … 20	Frequency gate time [s] ✪	

Limit values Lim1 … Lim3

Name	Value range	Description	
Fnc.1 (Fnc.2) (Fnc.3)		Function of limit 1 (2, 3)	
	0	Switched off	
	1	Measured value monitoring	
	2	Measured value monitoring + alarm status latch. A stored limit value can be reset via error list or a digital input (-> LOGI/Err.r)	
	3	Signal change (in minutes).	
	4	Signal monitoring for rate of change (per minute) + storage of the alarm status. A stored limit value can be reset via error list or a digital input (->LOGI/Err.r)	
Src.1 (Src.2) (Src.3)		Source of limit 1 (2, 3)	
	0	Process value= displayed value	
	3	Measured value of the analog input INP1	
	4	Measured value of the analog input INP2	
	10	Counter/frequency measurement value	
C.Std	OFF; 1 … 9999999	Monitoring operating hour (only visible with BlueControl!)	
C.Sch	OFF; 1 … 9999999	Monitoring duty cycle (only visible with BlueControl!)	

Outputs Out.1 and Out.2 ✪ (Relay)

Name	Value range	Description	
O.Act		Direction of operation OUT1	
	0	Direct / normally open	
	1	Inverse / normally closed	
Lim.1		Signal limit 1	
	0	Not active	
	1	Active	
Lim.2		Signal limit 2	
	0	Not active	
	1	Active	
Lim.3		Signal limit 3	
	0	Not active	
	1	Active	
FAi.1		Signal INP1 fail	
	0	Not active	
	1	Active	
FAi.2		Signal INP1 fail ✪	
	0	Not active	
	1	Active	
FAi.F		Frequency error µ message	
	0	Not active	
	1	Active	
Sb.Er		System bus error µ message	
	0	Not active	
	1	Active	
fOut		Forcing of analog output OUT 1 (only visible with BlueControl!)	
	0	Not active	
	1	The value for this output is preset via interface	
Inf.1		Status message Inf.1 (operating hours) (only visible with BlueControl!)	
	0	Not active	
	1	active	

Name	Value range	Description	
Inf.2		Status message Inf.2 (number of switching cycles) (visible only with BlueControl!)	
	0	Not active	
	1	Active	

Output Out.3 (analog)

Name	Value range	Description	
O.typ		Type of OUT3	
	0	Relay / logic (only visible with current/logic/voltage)	
	1	0 ... 20 mA continuous (only visible with current/logic/voltage)	
	2	4 ... 20 mA continuous (only visible with current/logic/voltage)	
	3	0...10 V continuous (only visible with current/logic/voltage)	
	4	2...10 V continuous (only visible with current/logic/voltage)	
	5	Transmitter supply (only visible with current/logic/voltage)	
	6	Frequency µ	
O.Act		Direction of operation OUT3 (only visible with O.TYP=0)	
	0	Direct / normally open	
	1	Inverse / normally closed	
Lim.1		Signal limit 1 (only visible with O.TYP=0)	
	0	Not active	
	1	Active	
Lim.2		Signal limit 2 (only visible with O.TYP=0)	
	0	Not active	
	1	Active	
Lim.3		Signal limit 3 (only visible with O.TYP=0)	
	0	Not active	
	1	Active	
FAi.1		Signal INP1 fail (only visible with O.TYP=0)	
	0	Not active	
	1	Active	
FAi.2		Signal INP2 fail (only visible with O.TYP=0) ✪	
	0	Not active	
	1	Active	
FAi.F		Frequency error µ message	
	0	Not active	
	1	Active	
Sb.Er		System bus error µ message	
	0	Not active	
	1	Active	
Out.0	-1999 ...9999	Lower scaling limit of the analog output (corresponds to 0% (0/4mA bzw. 0/2V, only visible with O.TYP=1..4)).	
Out.1	-1999 ...9999	Upper scaling limit of the analog output (corresponds to 100% (20mA bzw. 10V, only visible with O.TYP=1..4)).	
Out.L	-1999 ...9999	Input value for min. output frequency (visible only with O.TYP=6) ✪	
Fr.0.L	-1999 ...9999	Min. output frequency in Hz (visible only with O.TYP=6) ✪	
Out.H	-1999 ...9999	Input value for max. output frequency (visible only with O.TYP=6) ✪	
Fr.0.H	0.0...9999	Max. output frequency in Hz (visible only with O.TYP=6) ✪	

Name	Value range	Description	
O.Src		Signal source for analog output OUT3 (only visible with O.TYP=1..4)	
	0	Not active	
	3	Process value	
	7	Measured value INP1	
	8	Measured value INP2 ✪	
O.FAI		Fail behaviour	
	0	Upscale	
	1	Downscale	
Inf.1		Status message Inf.1 (operating hours) (visible only with BlueControl!)	
	0	Not active	
	1	Active	
Inf.2		Status message Inf.2 (number of switching cycles) (visible only with BlueControl!)	
	0	Not active	
	1	Active	
fOut		Forcing OUT3 (only visible with BlueControl!)	
	0	Not active	
	1	The value for this output is preset via interface	

Logic LOGI

Name	Value range	Description	
di.Fn		Function of inputs (valid for all inputs)	
	0	Direct	
	1	Invers	
	2	toggle key function (adjustable for 2-point-operation with interface and di1)	
L_r		Local / remote switchover (Remote: Adjustment of all values via the front panel is blocked)	
	0	No function (switch-over via interface is possible)	
	1	Always active.	
	2	Di1 switches.	
	7	Limit 1 switches	
	8	Limit 2 switches	
	9	Limit 3 switches	
Err.r		Source for resetting all stored entries in the error list	
	0	No function (switch-over via interface is possible)	
	2	Di1 switches.	
	7	Limit 1 switches	
	8	Limit 2 switches	
	9	Limit 3 switches	
I.ChG		Switching the effective process value between INP1 and INP2. ✪ (input 2 must be released (CONF / Inp.2 / I.Fnc = 1))	
	0	No function (switch-over via interface is possible).	
	2	Di1 switches.	
	7	Limit 1 switches	
	8	Limit 2 switches	
	9	Limit 3 switches	

Name	Value range	Description	
tArA		Tare-function ✪ (function must be activated (CONF /FUNC / Fnc.3 = 1))	
	0	No function (switch-over via interface is possible).	
	2	Di1 switches.	
	7	Limit 1 switches	
	8	Limit 2 switches	
	9	Limit 3 switches	
HoLd		Sample & hold -function ✪(function must be activated (CONF /FUNC / Fnc.3 = 2))	
	0	No function (switch-over via interface is possible).	
	2	Di1 switches.	
	7	Limit 1 switches	
	8	Limit 2 switches	
	9	Limit 3 switches	
rESL		Reset minimum value	
	0	No function (switch-over via interface is possible).	
	2	Di1 switches.	
	7	Limit 1 switches	
	8	Limit 2 switches	
	9	Limit 3 switches	
rESH		Reset maximum value	
	0	No function (switch-over via interface is possible).	
	2	Di1 switches.	
	7	Limit 1 switches	
	8	Limit 2 switches	
	9	Limit 3 switches	
rESI		Reset Integrator	
	0	No function (switch-over via interface is possible).	
	2	Di1 switches	
	6	Reset-key switches	
	7	Limit 1 switches	
	8	Limit 2 switches	
	9	Limit 3 switches	
rESC		Zähler-Reset	
	0	No function (switch-over via interface is possible).	
	6	Reset-key switches	
	7	Limit 1 switches	
	8	Limit 2 switches	
	9	Limit 3 switches	
fDI1		Forcing of digital input di 1 (only visible with BlueControl!)	
	0	Not active	
	1	The value for this output is preset via interface	

Other othr

Name	Value range	Description	
bAud		Bit rate of the interface ✪	
	0	2400 Baud	
	1	4800 Baud	
	2	9600 Baud	
	3	19200 Baud	
	4	38400 Baud	
Addr	1...247	Address on the interface ✪	

Name	Value range	Description	
PrtY		Data parity on the interface ✪	
	0	no parity (2 stop bits)	
	1	Even parity	
	2	odd parity	
	3	no parity (1 stop bit)	
dELY	0...200	Delay of response signal [ms] ✪	
S.IF		System interface ✪	
	0	off	
	1	on	
D.Unt		display unit	
	0	without unit	
	1	Temperature unit (see Data Unit)	
	2	O_2 unit (see Data O2)	
	3	%	
	4	bar	
	5	mbar	
	6	Pa	
	7	kPa	
	8	psi	
	9	l	
	10	l/s	
	11	l/min	
	12	Ohm	
	13	kOhm	
	14	m	
	15	A	
	16	mA	
	17	V	
	18	mV	
	19	kg	
	20	g	
	21	t	
	22	Text of phys. Unit (default in T.Unit / preset via BlueControl)	
O2		Parameter unit for O_2 ✪	
	0	Parameter for O_2 function in ppm	
	1	Parameter for O_2 function in %	
Unit		Temperature-unit	
	0	No unit	
	1	°C	
	2	°F	
	3	Kelvin	
dP		Decimal point (max. no of decimals)	
	0	no digit behind the decimal point	
	1	1 digit behind the decimal point	
	2	2 digits behind the decimal point	
	3	3 digits behind the decimal point	
SEGm		Meaning of the display elements 1 and 2	
	0	OUT1, OUT2	
	1	INP1, INP2	
C.dEl	0..200	Modem delay [ms]	

Name	Value range	Description	
FrEq		Switching 50/60 Hz (only visible with BlueControl!)	
	0	Mains frequency 50 Hz	
	1	Mains frequency 60 Hz	
ILat		suppress error latch (only visible with BlueControl!)	
	0	Enabled	
	1	Blocked	
IExo		Access to extended operation level (only visible with BlueControl!)	
	0	Enabled	
	1	Blocked	
Pass	OFF...9999	Password (only visible with BlueControl!)	
IPar		Access to parameter level (only visible with BlueControl!)	
	0	Enabled	
	1	Blocked	
ICnf		Access to configuration level (only visible with BlueControl!)	
	0	Enabled	
	1	Blocked	
ICal		Access to calibration level (only visible with BlueControl!)	
	0	Enabled	
	1	Blocked	
T.Dis2		Entries for the text in display 2 (max. 5 digits) (only visible with BlueControl!)	

Linearization Lin

Only visible with BlueControl!

Name	Value range	Description	
U.LinT		Temperature-unit of linearization table	
	0	No unit	
	1	°C	
	2	°F	
	3	Kelvin	
In.1 … In.32	OFF (from In.3)-1999...9999	Input 1 … Input 32	
Ou.1 … Ou.32	-999.0 … 9999	Output 1 … Output 32	

Value U.LinT defines the unit of input values specified for linearization of temperature values . Value entry in Celsius despite display of the measured value in Fahrenheit is possible.

- Specify the input signals mV, V, mA, % or Ohm dependent on input type.
- For special thermocouples (S.tYP = 18), specify the input values in µV and the output values in the temperature unit adjusted in U.LinT.
- For special resistance thermometer (KTY 11-6) (S.tYP = 23), specify the input values in Ohm and the output value in the temperature unit adjusted in U.LinT .

For resetting the instrument configuration to factory setting (default),

→ section 12.4, 6.17 (page 37)

8 Parameter setting level

8.1 Parameter survey

Dependent on instrument version, display of parameters which are not required is suppressed.

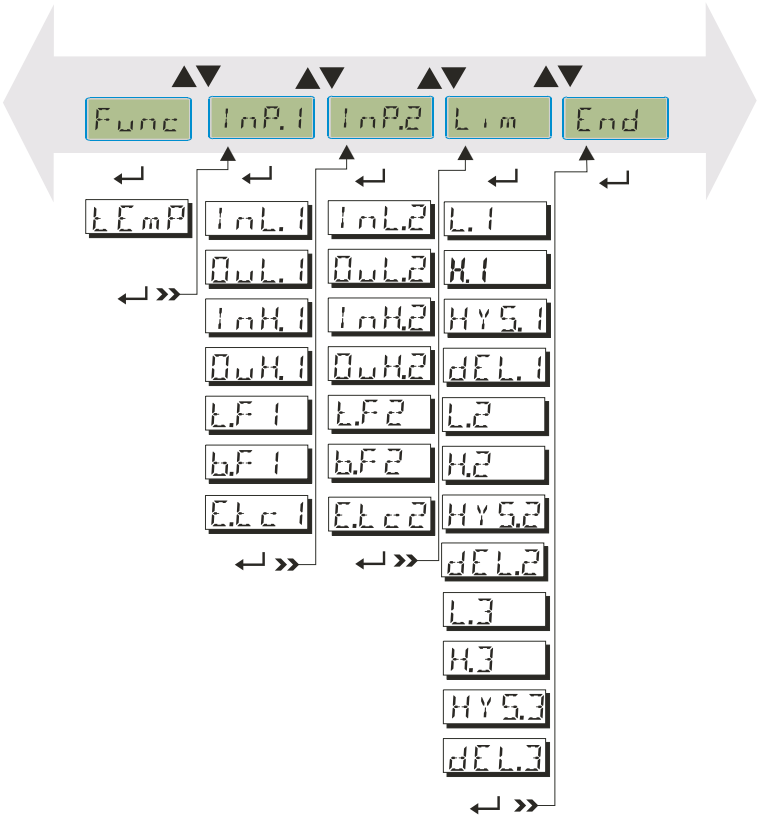

8.2 Adjustment

- The parameters can be adjusted by means of keys ▲▼ .
- Transition to the next parameter is by pressing key ↵
- After the last parameter of a group, donE is displayed and the transmitter changes to the next group automatically.

Press key ↵during 3 s to return to the beginning of a group.

Unless a key is pressed during 30 sec., the transmitter returns to the operating level (timeout = 30 s).

8.3 Parameters

✪ The entries marked with this symbol are selectable only with the instrument option fitted.

Function selection Func

Name	Value range	Description	
tEmP	0...9999	Probe temperature for O_2 -measurement ✪	
t.I	0,1...9999	Integrator-Zeitkonstante in Minuten µ	
P.I	-1999...9999	Integrator-Offsetµ	

Inputs InP.1 and InP.2 ✪

Name	Value range	Description	
InL.1(InL.2)	-1999...9999	Input value of the lower scaling point	
OuL.1 (OuL.2)	-1999...9999	Display value of the lower scaling point	
InH.1 (InH.2)	-1999...9999	Input value of the upper scaling point	
OuH.1 (OuH.2)	-1999...9999	Display value of the upper scaling point	
T.F 1 (t.F2)	0...999,9	Filter time 1 [s]	
b.F 1 (b.F2)	0...9999	Filter bandwidth	
E.tc 1(E.tc2)	OFF, 0...100	external cold junction compensation, range depends on temperature unit	

Counter/frequency input ✪

Name	Value range	Description	
Cnt.d	0,1...9999	Counter divider	
Cnt.S	0...9999	Counter start value	
Cnt.E	0...9999	Counter end value	
Fr 9.L	0.000...100.0	Lower input value in kHz	
Ou.L	-1999...9999	Lower output value in phys. units	
Fr 9.H	0.000...100.0	Upper input value in kHz	
Ou.H	-1999...9999	Upper output value in phys. units	
Fr 9.F	0...9999	Filter time constant in s	

Limit values Lim1 … Lim 3

Name	Value range	Description	
L. 1	-1999...9999	Lower limit 1 (L. 1 < -1999 ≙ off)	
H. 1	-1999...9999	Upper limit 1 (H. 1 < -1999 ≙ off)	
HYS.1	0...9999	Hysteresis 1	
dEL.1	0...9999	Limit 1 delay	
L.2	-1999...9999	Lower limit 2 (L.2 < -1999 ≙ off)	
H.2	-1999...9999	Upper limit 2 (H.2 < -1999 ≙ off)	
HYS.2	0...9999	Hysteresis 2	
dEL.2	0...9999	Limit 2 delay	
L.3	-1999...9999	Lower limit 3 (L.3 < -1999 ≙ off)	
H.3	-1999...9999	Upper limit 3 (H.3 < -1999 ≙ off)	
HYS.3	0...9999	Hysteresis 3	
dEL.3	0...9999	Limit 3 delay	

For resetting the parameters to factory setting (default),

→ section 12.4, 6.17 (page 37)

9 Calibrating level

Adaptation of the measurement value is possible in the calibrating menu (CAL).

Measured value correction (CAL) is accessible only, if ConF / InP/Corr = 1 or 2 was selected.

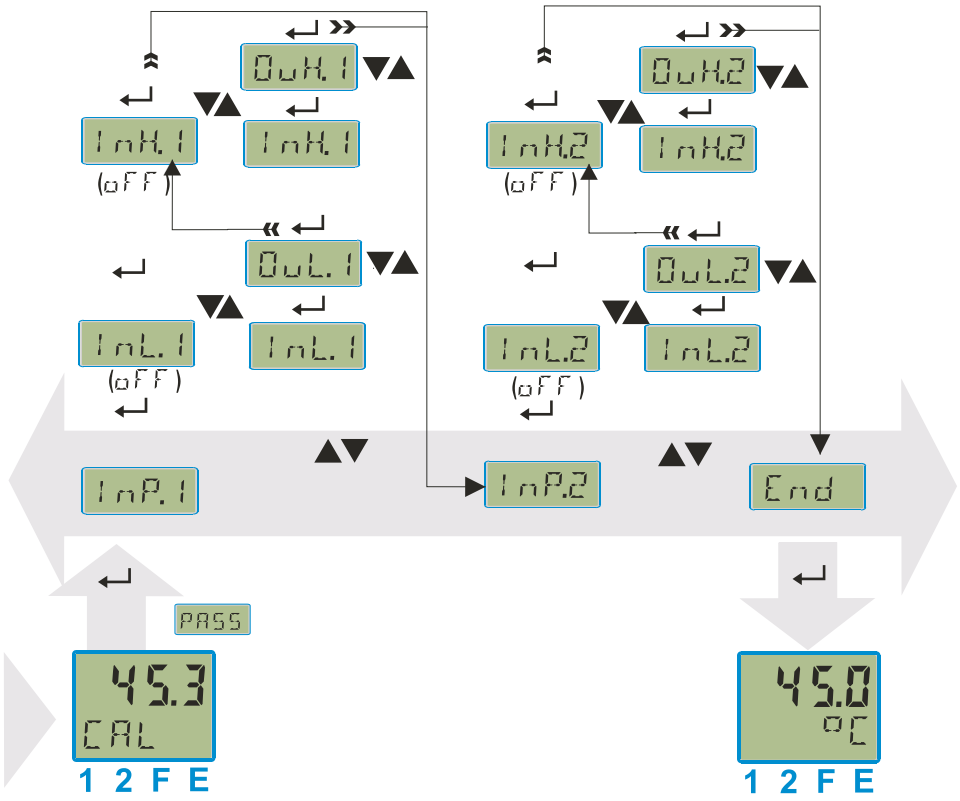

Two methods are possible :

- offset correction
- 2-point correction

Values InL.x and InH.x are displayed with one digit behind the decimal point. However, the full resolution is used as a reference for calculating the correction.

The easiest way to delete the corrective values is by switching off the measured value correction Corr =0 or by setting the scaling parameters to a linear curve.

Values InL.x and InH.x indicate the actual measurement value. Output values OuL.x and OuH.x start with the previously adjusted value.

9.1 Offset correction

Offset correction shifts the input value by a pre-defined value.
Parameter setting:
(ConF / InP / Corr = 1):

- On-line offset correction at the process is possible.

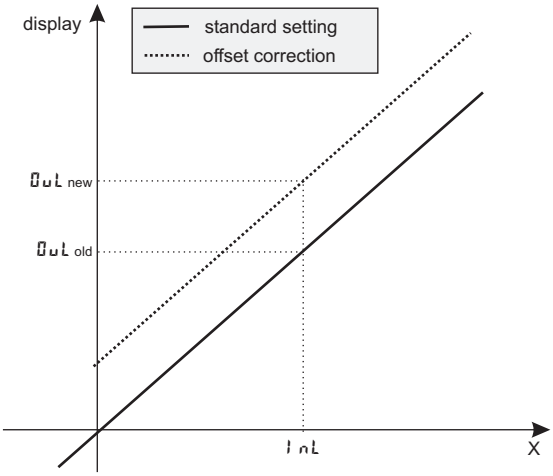

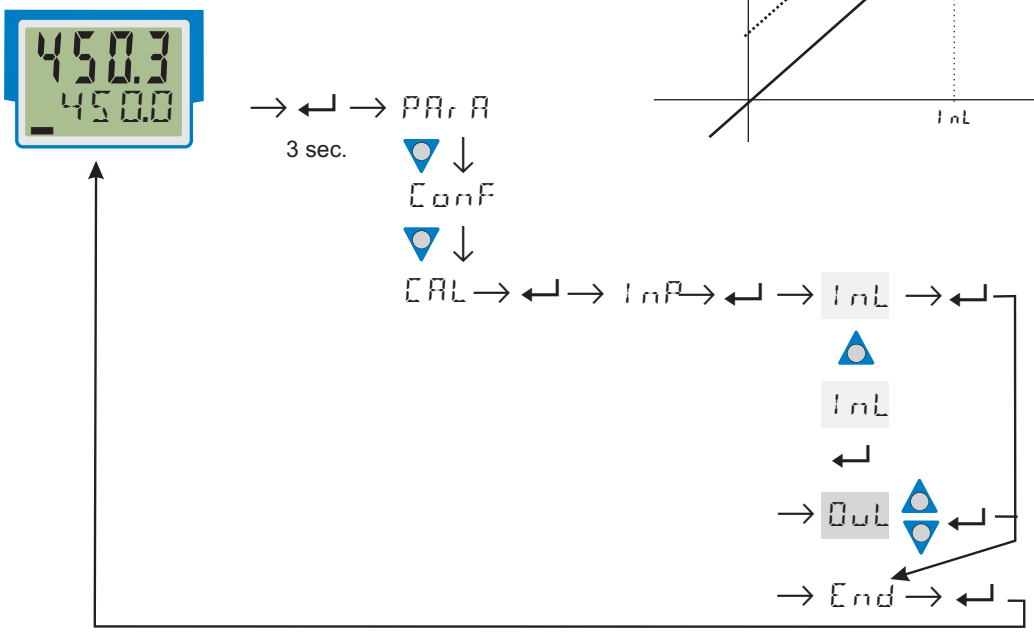

InL : The actual input value of the scaling point is displayed.
The correction function is activated by means of keys ▲▼ ; the display changes from Off to the measured value.
The operator must wait, until the process is at rest.
Subsequently, the input value has to be confirmed by pressing key ↵.

OuL : The scaling point display value is indicated.
The operator can correct the display value by pressing keys ▲▼. Subsequently, he presses key ↵to confirm the display value.

9.2 2-point correction

2-point correction can change the offset and gradient of
the input curve.
Parameter setting:
(ConF / InP / Corr = 2):

- 2-point correction is possible off-line by means of
  an input signal simulator,
- or on-line in 2 steps: correct one value first and the second value subsequently, e.g. after heating up the furnace.

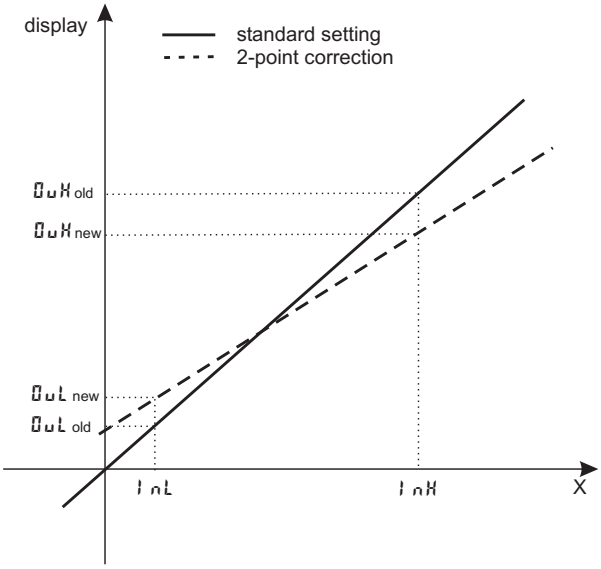

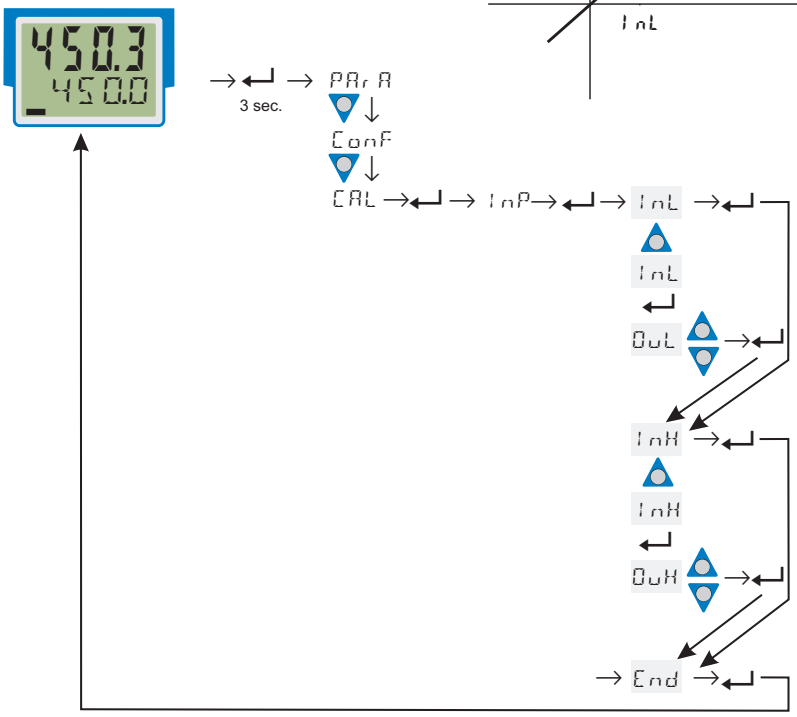

InL : The input value of the lower scaling point is displayed.
The correction function is activated via keys ▲▼ ; the display changes from Off to the measurement value.
Adjust the lower input value by means of an input signal simulator and press key ↵ to confirm the input value.

OuL : The display value of the lower scaling point is indicated.
Press keys ▲▼ to correct the lower display value and press key ↵ to confirm the display value.

InH: The input value of the second scaling point is displayed.
Activate the corrective function by pressing keys ▲▼ ; the display changes from Off to the measured value.
Adjust the upper input value by means of the input signal simulator and confirm the input value by pressing key ↵.

OuH: The display value of the upper scaling point is indicated.
Correct the upper display value by pressing keys ▲▼ and press key ↵ to confirm the display value.

10 BlueControl ® engineering tool

The BlueControl® engineering tool is the projecting environment for the PMA BluePort® instrument series and for the ***rail line*** series. The following versions with different functionalities are available:

Functions	Mini	Basic	Expert*
Parameter and configuration setting	yes	yes	yes
Download: Writing an engineering to the transmitter	yes	yes	yes
Online-Mode / visualisation	SIM only	yes	yes
Creation of user-specific linearization	SIM only	yes	yes
Configuration of extended operating level	yes	yes	yes
Upload: Reading an engineering from the transmitter	SIM only	yes	yes
Basic diagnosis function	no	nein	yes
Storage of data, engineerings	no	yes	yes
Printer function	no	yes	yes
Onlinedocumentation / help	yes	yes	yes
Measurement correction	yes	yes	yes
Data aquisition and trend-recording	SIM only	yes	yes
Net- / Multiuserlicence	no	no	yes
Personal assistant function			

* on request

A free-of-charge mini version is available for download on the PMA homepage *www.pma-online.de* or on PMA CD (on request).

At the end of installation, enter the licence number delivered with BlueControl or select DEMO mode. In DEMO mode, subsequent entry of the licence number is also possible in *Help → Licence → Add* .

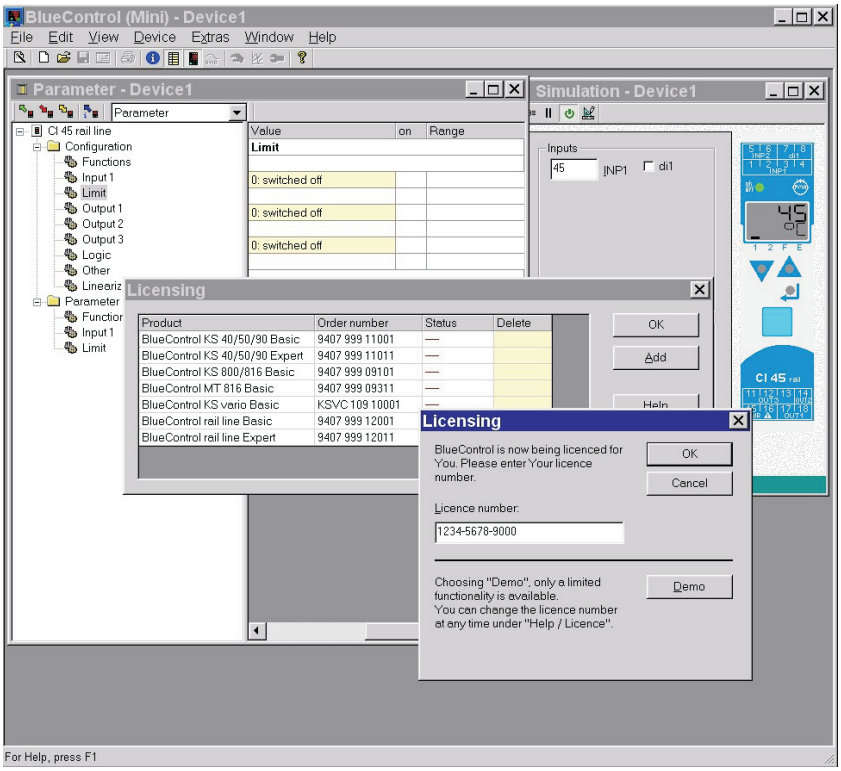

11 Versions

Universal transmitter CI 45

C I 4 5 - 1 _ _ - _ _ 0 _ 0 - _ 0 0

1 universal-input, control-input with display and BluePort®-interface

no plug-in connectors	**0**
	1
90..260V AC, mA/V/Logik +1 relay	**2**
18...30VAC/18..31VDC, mA/V/logic+1 relay	**3**
90..260V AC, mA/V/logic + 2 relay	**4**
18...30VAC/18..31VDC, mA/V/logic+2 relay	**5**
noOption	**0**
RS 485 / MODBUS - protocol	**1**
systeminterface for 24V versions only	**2**
noOption	**0**
Optionpack 1*	**1**
Optionpack 2**	**2**
Standardconfiguration	**0**
Configuration to specification	**9**
Standard (CE-certification)	**0**
cULus - certification	**U**

* Optionspaket 1: zusätzlicher Universaleingang INP2,
zusätzlich: O2-Messung, Zählereingang, Funktionen Tara, Abtast-Halteverstärker, Integrator

** Optionspaket 2: zusätzlich zu Optionspaket 1:
Digitaleingang als Optokoppler, Frequenzeingang, Frequenzausgang

Accessories delivered with the transmitter:

- Operating note
- Rail-to-bus connector for the interface option

Additional equipment with ordering data.

Description		Order no.
PC adaptor for the BluePort® front interface		9407-998-00001
Operating instructions for CI 45	German	9499-040-71718
Operating instructions for CI 45	English	9499-040-71711
Interface description MODBUS rail line	German	9499-040-72018
Interface description MODBUS rail line	English	9499-040-72011
BlueControl® Mini	German/English	www.pma-online.de
BlueControl® with basic licence rail line	German/English	9407-999-12001
BlueControl® with expert licence rail line	German/English	9407-999-12011

12 Technical Data

INPUTS

UNIVERSAL INPUT INP1

Resolution: >15 bits
Decimal point: 0 to 3 decimals
Digital input filter: adjustable 0.0...999.9 s
Scanning cycle: 100 ms
Linearization: 31 segments, adaptable with BlueControl®
Measurement value correction: 2-point or offset
Limiting frequency: 1.7 Hz

Thermocouples (Table 1)

Input resistance: ≥ 1 MΩ
Influence of source resistance: 1 µV/Ω
Input circuit monitor: break, polarity

Cold-junction compensation

- Iinternal,
  - additional error: typ.: ≤± 0,5 K
    max.: ≤ +1,2 K

External:
- value setting: 0 ...100 °C
-measured via INP2 (option)

Break monitoring

Sensor current: ≤ 1 µA
Operating sense configurable

Resistance thermometer (Table 2)

Connection technique: 3 or 4-wire
Lead resistance: max. 30 Ω
Input circuit monitoring: break and short circuit

Measurement span

The BlueControl® software enables the internal characteristic curve for the KTY 11-6 temperature sensor to be adapted.
Divided into ranges
Physical measurement range: 0...4500 Ω

Current and voltage measurement (Table 3)

Span start and span: anywhere within the measurement range
Scaling: freely selectable –1999...9999
Input circuit monitoring (current): 12.5% below span start (2 mA)

O_2-measurement (optional)

EMI-measuring by means of INP1 (high-impedance mV-inputs) suitable for probes with
-constant sensor temperature (heated probes), setting by means of parameter
- -measured sensor temperature (non-heated probes), measuring by means of INP2

ADDITIONAL INPUT INP2 (UNIVERSAL, OPTION)

Resolution: > 15 bits
dig. input filter: adjustable 0,0...999,9 s
Scanning cycle: 140 ms
Linearization: as for INP1
Meas. value correction: 2-point or offset correction
Type: single ended except thermocouples

Table 1: Thermocouple input

Thermocouple type		Measurement range		Error	Typical resol.
L	Fe-CuNi (DIN)	-100...900°C	-148...1652°F	≤ 2K	0.05 K
J	Fe-CuNi	-100...1200°C	-148...2192°F	≤ 2K	0.05 K
K	NiCr-Ni	-100...1350°C	-148...2462°F	≤ 2K	0.1 K
N	Nicrosil/Nisil	-100...1300°C	-148...2372°F	≤ 2K	0.1 K
S	PtRh-Pt 10%	0...1760°C	32...3200°F	≤ 3K	0.1 K
R	PtRh-Pt 13%	0...1760°C	32...3200°F	≤ 3K	0.1 K
T	Cu-CuNi	-200...400°C	-328...752°F	≤ 2K	0.03 K
C	W5%Re-W26%Re	0...2315°C	32...4199°F	≤ 3K	0.2 K
D	W3%Re-W25%Re	0...2315°C	32...4199°F	≤ 3K	0.2 K
E	NiCr-CuNi	-100...1000°C	-148...1832°F	≤ 2K	0.05 K
B *	PtRh-Pt6%	0(400)...1820°C	32(752)...3308°F	≤ 3K	0.2 K
	Special	-25 … 75 mV		≤ 0.1%	0.005%

** Values apply from 400°C upwards.*

Table 2: Resistive inputs

Type	Sensor current	Measurement range		Error	Typical resol.
Pt100***	≤ 0,25mA	-200...100(150)°C	-328...212(302)°F	≤ 1 K	0.05 K
Pt100		-200...850°C	-328...1562°F	≤ 2 K	0.05 K
Pt1000		-200...850°C	-328...1562°F	≤ 2 K	0.05 K
KTY 11-6*		-50...150°C	-58...302°F	≤ 2 K	0.05 K
Special*		0...4500 Ω**		≤ 0.1%	0.005%
Special*		0...450 Ω**		≤ 0.1%	0.005%
Potentiom.		0...160 Ω**		≤ 0.1%	0.005%
Potentiom.		0...450 Ω**		≤ 0.1%	0.005%
Potentiom.		0...1600 Ω**		≤ 0.1%	0.005%
Potentiom.		0...4500 Ω**		≤ 0.1%	0.005%

** Default setting is the characteristic for KTY 11-6 (-50...150°C)*
*** Including lead resistance*
**** up to 150°C at reduced lead resistance (max. 160 Ω)*

Table 3: Current and voltage input

Measurement range	Input resistance	Error	Typical resol.(∅)
0...10 V	≈ 110 kΩ	≤ 0.1 %	0.3 mV
-10...10 V	≈ 110 kΩ	≤ 0.1 %	0.6 mV
-5...5 V	≈ 110 kΩ	≤ 0.1 %	0.3 mV
-2,5...115 mV*	≥ 1 MΩ	≤ 0.1 %	4 µV
-25...1150 mV*	≥1 MΩ	≤ 0.1 %	40 µV
-25...90 mV*	≥1 MΩ	≤ 0.1 %	4 µV
-500...500 mV*	≥1 MΩ	≤ 0.1 %	40 µV
-200...200 mV*	≥1 MΩ	≤ 0.1 %	20 µV
0...20 mA	20 Ω	≤ 0.1 %	0.8 µA

** For INP1: high-impedance, without break monitoring*

Thermocouples (Table 1)

Cold-junction compensation

- Internal,

Additional error:
typ.: ≤± 0,5 K
max.: ≤ -2,5 K

- external,
  - constant value 0...100 °C

Further technical data as INP1

Resistive sensors (Table 2)

Connection technique: 3-wire

Measurement span

Further technical data as INP1.

Current and voltage measuring ranges (Table 3)

Remaining technical data as for INP1 except:
- Voltage input ranges –10 / 0...+10V and -5...+5V not possible.
- Millivolt input ranges: break monitoring always active.

DIGITAL INPUT DI1

Designed as:

a) Contact input

Connection of a potential-free contact suitable for switching "dry" circuits.

Switched voltage: 5 V
Current: 1 mA

b) Opto-coupler input (optional)

For active control signals.

Rated voltage: 24 V DC external
Logic "0": -3 V … 5 V
Logic "1": 15 V… 30 V
Current requirement : max. 6 mA

Control input

Configurable as a direct or inverse switch or key!

Functions:	Locking front operating, resetting of latched alarms, slave pointers, integrator; activating tare-, sample&hold function; switchover between inputs

Counter input (optional)

Pulse counter for up or down counting, non storing

Active edge:	configurable
Width of counter register:	31 bits
Display range:	Configurable via counter divisor, 8-digits can be repartitioned to 2 lines
Counter divisor:	adjustable 0.1...9999
Start value:	adjustable
End value:	adjustable; reaching can be signalled via output
Counter evaluation:	At intervals of 100 ms (140 ms with INP2 measurement)
Reset:	Via key combination, Limit value

Counter input with option contact

Count frequency, max.:	5 Hz with square wave 1:1
pulse duration, min.:	100ms

Counter input with option optocoupler

Count frequency, max.:	100 kHz with square wave 1:1
Pulse duration, min.:	5µs

Effects to active transmitters connected to INP1, INP2 can occur.

Frequency input (optional)

Input with option optocoupler

Frequency range:	0...100 kHz with square wave 1:1
Gate time:	adjustable, 0.1... 20s
Process value:	scalable
Effects to active transmitters connected to INP1, INP2 can occur.	

OUTPUTS

RELAY OUTPUTS OUT1, OUT2

Contact type:	2 normally open contacts with common connection
Maximum contact rating:	500 VA, max. 250 V, max. 2A at 48...62 Hz, resistive load
Minimum contact rating:	6V, 1 mA DC
Number of electrical switching cycles:	for I= 1A/2A: ≥ 800.000 / 500.000 (at ~ 250V (resistive load))

Note:
If the relays OUT1 and OUT2 operate external contactors, these must be fitted with RC snubber circuits to manufacturer specifications to prevent excessive voltage peaks at switch-off.

OUT3 AS UNIVERSAL OUTPUT

Galvanically isolated from the inputs. Parallel current/voltage output with common 'minus' terminal (combined use only in galvanically isolated circuits).

Freely scalable

Resolution:	14 bits
Dynamic response (step change of input signal) T90:	Output follows the input ≤ 540 ms
Tracking error I/U:	≤ 2%
Residual ripple: (rel. to range end)	≤±1% 0...130 kHz

Current output

0/4...20 mA, configurable.
short circuit proof

Linear range:	-0.5...23 mA
Load:	≤ 700 Ω
Load effect:	≤0,02%
Resolution:	≤ 1,5 µA
Error:	≤0.1%

Voltage output

0/2...10V, configurable
not continous short-circuit proof

Linear range:	-0,15...11,5 V
Load:	≥ 2 kΩ
Load effect:	≤0.06%
Resolution:	≤ 0.75 mV
Error:	≤ 0.1%
Additional error when using simultaneously the current output:	≤+0.09%

OUT3 as transmitter supply

Output:	22 mA / ≥ 13 V DC

OUT3 as logic signal

Load ≤ 700 Ω	0/≤ 23 mA
Load > 500 Ω	0/> 13 V

Frequency output

Output by means of voltage output

Frequency range:	0, 0.25 ...1000 Hz (square-wave signal)
Output value:	scalable
Level:	0 / 11,5V

Pulse output

by means of integrator with automatic resetting

Frequency range:	0 ...5 Hz (max. 5 pulses/s)
Pulse duration:	100 ms (INP1 measurement) 140 ms (INP1 + INP2 measurement)

Galvanic isolation

Fig. 1: Galvanic isolation

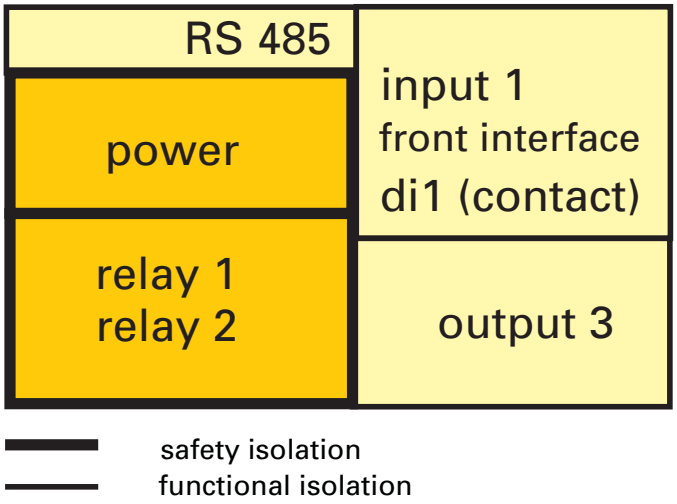

permissible voltages:

safety isolation	≤ 300 Vrmsf AC against earth
functional isolation	≤ 30 Vrmsf AC against earth

Galvanic isolation of inputs, outputs and supply voltage

Test voltages:

Between power supply and in-/outputs:	2,3 kV AC, 1 min
Between input and output:	500 V AC; 1min

Max. permissible voltages:

Between inputs/outputs against earth:	≤ 33 V AC

POWER SUPPLY

Depending on ordered version

AC supply

Voltage:	90...260 V AC
Frequency:	48...62 Hz
Consumption:	approx. 7 VA max.

Universal supply 24 V UC

AC supply:	18...30 V AC
Frequency:	48...62 Hz
DC supply:	18...31 V DC
Consumption:	approx. 3 VA / W max.

Supply only from safety electrical low voltage (SELV).

* Instruments with optional system interface:
Energization via the bus connector of field bus coupler or power supply module

Behaviour with power failure

Configuration and parameter settings:
Permanent storage in EEPROM

BLUEPORT® FRONT INTERFACE

Connection to the transmitter front via a PC adapter (see 'Accessories'). The BlueControl® software enables the CI 45 to be configured, parameters set, and operated.

BUS INTERFACE (OPTIONAL)

RS 485

Connection via bus connector fitted in the top-hat rail. Screened cables should be used.

Galvanically isolated

Type:	RS 485
Transmission speed:	2400, 4800, 9600, 19.200, 38.400 bits/sec
Parity:	even, uneven, none
Address range:	1...247
Number of transmitters per bus segment:	32

Protocol

Modbus RTU

SYSTEM INTERFACE

For connection to field bus coupler (s. system components)
Connection via bus connector in the top-hat rail.

ENVIRONMENTAL CONDITIONS

Protection mode

Front panel:	IP 20
Housing:	IP 20
Terminals:	IP 20

Permissible temperatures

For specified accuracy: -10...55°C
Warm-up time: < 20 minutes
Temperature effect: ≤ 0.05% / 10 K
add. influence to cold junction compensation: ≤ 0.75 K / 10 K
Operating limits: -20...60°C
Storage: -30...70°C

Humidity

Max. 95%, 75% yearly average, no condensation

Shock and vibration

Vibration test Fc (DIN EN 60068-2-6)

Frequency: 10...150 Hz
Unit in operation: 1g or 0.075 mm
Unit not in operation: 2g or 0.15 mm

Shock test Ea (DIN EN 60068-2-27)

Shock: 15 g
Duration: 11 ms

Electromagnetic compatibility

Meets EN 61326-1 for continuous, unattended operation.

Interference radiation:
- Within the limits for Class B devices.

Immunity to interference:
Meets the test requirements for devices in industrial areas.

Evaluation criteria:
- Surge interference partly has marked effects, which decay after the interference stops.
- With high levels of surge interference on 24 V AC mains leads, it is possible that the device is reset.

With HF interference, effects up to 50 µV can occur.

GENERAL

Housing front

Material: Polyamide PA 6.6
Flammability class: V0 (UL 94)

Connecting terminals

Material: Polyamide PA
Flammability class: V2 (UL 94) for screw terminals
V0 (UL 94) for spring-terminal terminals, bus connector

Electrical safety

Complies with EN 61010-1:
Over-voltage category II
Contamination degree 2
Protection class II

Certifications

CE certified

cULus-certification

(Type 1, indoor use)
File: E 208286

Electrical connections

Plug-in connector strips with terminals for lead cross-sections from 0,2 to 2,5 mm2. Choice of screw terminals or spring-clamp terminals.

Mounting method

Clip-on rail mounting (35 mm top-hat rail to EN 50 022). Locked by means of metal catch in housing base. Close-packed mounting possible.

Mounting position: vertical

Weight: 0,18 kg

Standard accessories

Operating instructions
With 'Interface' option: bus connector for fitting into top-hat rail

13 Index

0-9
- 2-point-correction 51

A
- accessories 53
- additional equipment 53
- alarm delay 30
- analog output 33
- applications 5
- arithmetic functions 27

B
- behaviour after switch on 15
- BlueControl 52

C
- calibrating level 49 - 51
- calibration 49
- cleaning 7
- configuration 38 - 46
- Connecting
  - bus interface 11
  - di1 11
  - Inp1 11
  - Inp2 11
  - Out1, Out2 11
  - Out3 11
- connecting diagram 10
- connectors 9
- Counter divisor 26

D
- dismounting 8
- Display overflow 26

E
- extended operating level 18

F
- filter 23
- forcing 35
- Forcing of the inputs 23
- Frequency filter 27
- Frequency scaling 27
- front view 14
- functions 19 - 37

I
- input fail detection 21
- input scaling 20 - 21
- input value monitoring 30
- installation hints 13

L
- limit 29 - 32
- linearization 19, 46
- logic - output 34

M
- maintenance 6
- maintenance manager 36
- maximum value 17
- minimum value 17
- mounting 8 - 9

N
- Number of switching cycles 32

O
- O2-measurement 23 - 24
- offset correction 50
- offset-correction 50
- Operating hours 32
- operating level 15 - 18
- operating structure 15
- operation 14 - 18

P
- parameter-level 47 - 48

R
- Resetting the counter 26

S
- safety hints 6 - 7
- Sample & hold amplifier 28
- slave pointer function 17
- Substitue value for inputs 23

T
- TAG - No. 17
- tare function 28
- technical data 54 - 58
- terminal connections 10 - 11
- transmitter power supply 34
- two-wire measurement 21

U
- units 17

V
- versions 53

9499-040-71711

Subject to alterations without notice
Änderungen vorbehalten
Sours réserve de toutes modifications

© PMA Prozeß- und Maschinen-Automation GmbH
P.O.B. 310 229, D-34058 Kassel, Germany
Printed in Germany 9499-040-71711 (06/2009)

A4, geheftet, SW-Druck, Normalpapier 80g weiß