THE INFORMATION CONTAINED IN THIS DRAWING IS THE SOLE PROPERTY OF L-COM, INC. ANY REPRODUCTION IN PART OR WHOLE WITHOUT THE WRITTEN PERMISSION OF L-COM, INC. IS PROHIBITED.

REVISIONS			
REV	DESCRIPTION	DATE	APPROVED
A	INITIAL RELEASE	07/21/2016	SLI
B	ECN 8937: CHG PRODUCT DESCRIPTION FROM USB 3.1 TO USB 3.0	09/20/2017	RCLARK
C	ECN 8944: UPDATE TO THE CORRECT STRAIN RELIEF FOR A FEMALE END	09/27/2017	SLI
D	ECN 9382: UPDATE THE OVERMOLD ON A FEMALE END	08/30/2018	SLI

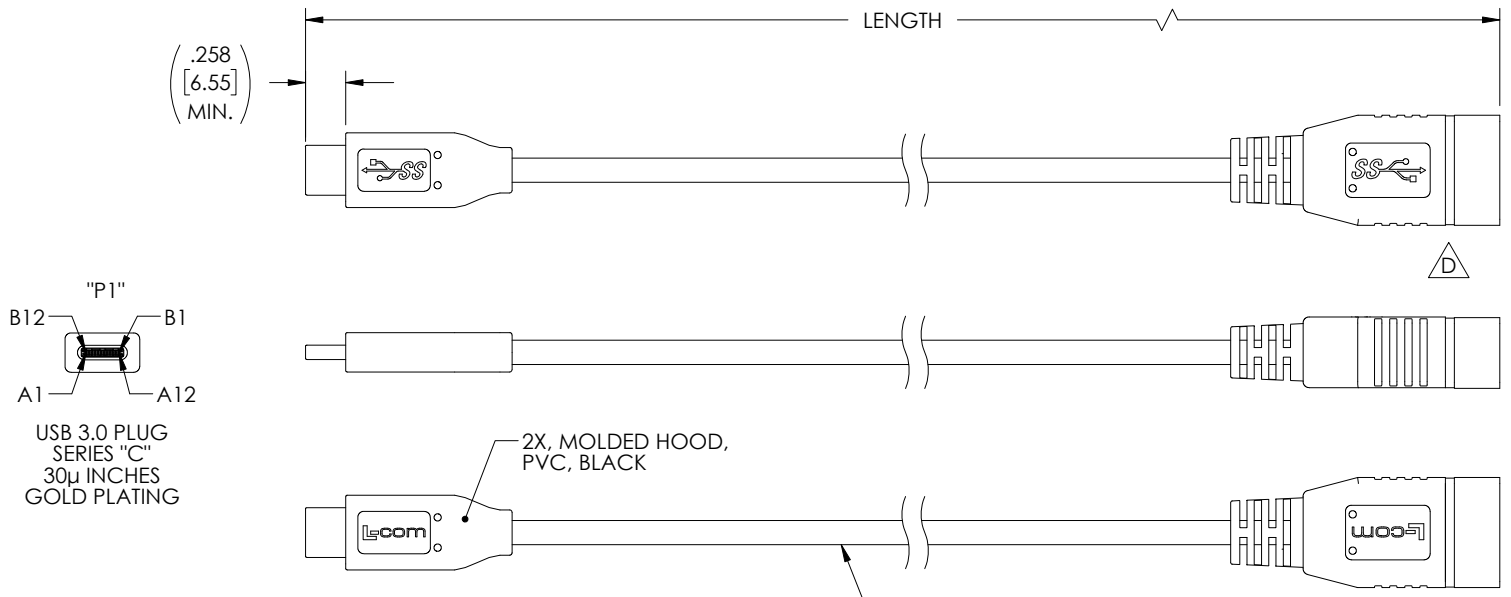

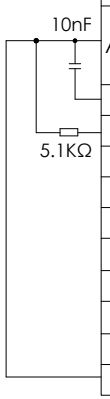

WIRE MAP					
"P1"	SIGNAL NAME	CONDUCTOR	"J1"	SIGNAL NAME	COLOR
A1,B1,A12,B12	GND	INDV.	4	GND	BLACK
		SHIELDED PAIR DRAIN 1, DRAIN 2	7	GND_DRAIN	N/A
A4,B4,A9,B9	VBUS	INDV.	1	VBUS	RED
A5	CC	N/C			
B5	VCONN	N/C			
A6	Dp1	UNSHIELDED PAIR	3	D+	GREEN
A7	Dn1		2	D-	WHITE
A2	SSTXp1	SHIELDED PAIR 1	9	StdA_SSTX+	YELLOW
A3	SSTXn1		8	StdA_SSTX-	BLUE
B11	SSRXp1	SHIELDED PAIR 2	6	StdA_SSRX+	ORANGE
B10	SSRXn1		5	StdA_SSRX-	PURPLE
SHELL	SHIELD	BRAID	SHELL	SHIELD	N/A

PART NUMBER	LENGTH METERS [FEET]
CAU31CAF-03M	0.3 [.98]
CAU31CAF-05M	0.5 [1.64]
CAU31CAF-1M	1.0 [3.28]
CAU31CAF-2M	2.0 [6.56]
CAU31CAF-3M	3.0 [9.84]
CAU31CAF-3F	0.91 [3.0]

NOTES:

1. CABLE ASSEMBLY SHALL HAVE 360° SHIELD TERMINATION.
2. CABLE ASSEMBLY SHALL BE TESTED FOR CONTINUITY.
3. L-COM LOGO AND USB ICON MAY BE ON ANY SIDE OF THE OVERMOLD FOR USB SERIES "C" END.
4. CABLE ASSEMBLY SHALL BE INDIVIDUALLY PACKAGED IN ACCORDANCE WITH L-COM SPECIFICATION PS-0031.

REGULATORY COMPLIANCE:
CE2011/65/EU(RoHS DIRECTIVE)

UNLESS OTHERWISE SPECIFIED,
DIMENSIONS ARE IN INCHES [mm]
OVERALL CABLE LENGTH TOLERANCE:
≤12 [305] = +1 [25] / -0
>12 [305] ≤60 [1524] = +2 [51] / -0
>60 [1524] ≤120 [3048] = +4 [102] / -0
>120 [3048] ≤300 [7620] = +6 [152] / -0
>300 [7620] = +5% / -0%
ALL OTHER DIMENSIONAL TOLERANCES:
.X = ± .2 [5.08]
.XX = ± .02 [.51]
.XXX = ±.005 [.13]
PROJECTION

APPROVALS	DATE
DRAWN BY CN_SEVEN_LI	07/13/2016
CHECKED BY CN_BILL_ZHANG	07/13/2016
APPROVED BY CN_SHAWN_PAN	07/13/2016

CONFIGURATION DETAILS OF UNDIMENSIONED FEATURES MAY VARY
COLOR VARIATIONS MAY OCCUR

50 HIGH STREET
NORTH ANDOVER, MA
01845

CATEGORY: USB

PRODUCT DESCRIPTION: CBL USB 3.0 TYPE C/AF

SIZE	FSCM NO.	DWG. NO.	REV.
A	43321	CAU31CAF	D

SCALE: NONE | CAD FILE: CAU31CAF.SLDDRW | SHEET 1 OF 1