E37810

Thermowell for temperature sensors

THERMOWELL, D6/1,5"CLAMP/L=100

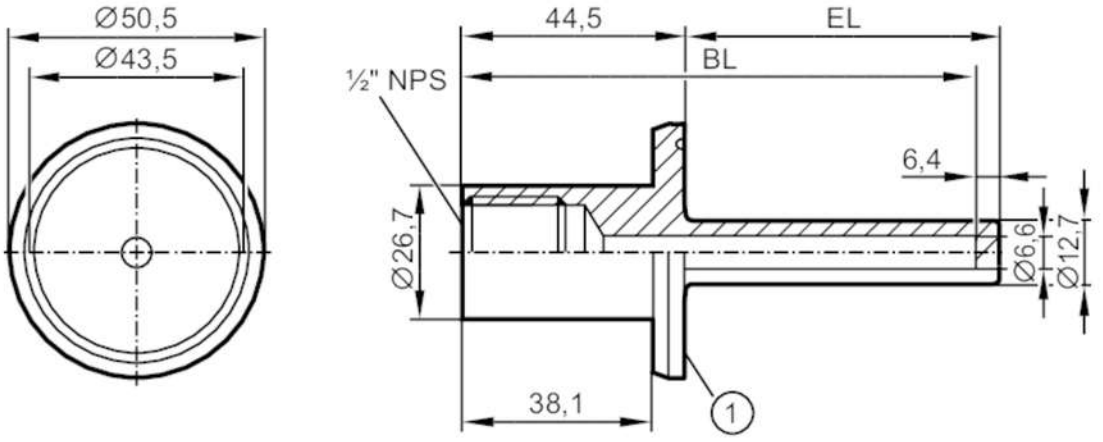

1 1.5" Clamp (ISO 2852)

3A EC 1935/2004 EHEDG Certified FDA

Application		
Design		for temperature sensors EL = 100 mm
Pressure rating	[bar]	25
Mechanical data		
Weight	[g]	241
Materials		stainless steel (1.4404 / 316L)
Sensor connection		1/2" NPS Ø 6 mm suitable for G1/2 and 1/2" NPT
Process connection		Clamp DN25...DN40 (1...1,5") DIN 32676 (ISO 2852)
Surface characteristics Ra/Rz of the wetted parts		≤ 0.6 / -
Installation length EL	[mm]	64
Bore length BL	[mm]	101.6
Remarks		
Pack quantity		1 pcs.