Clean*SIGN*



Clean*SIGN* - The LED Signal Tower in Hygienic Design

WERMA already has the appropriate solution to the challenges engineers and food manufacturers will have to face in the future: **The LED signal tower Clean*SIGN*** has been specially developed and constructed for use in **food and hygiene areas** as well as **cleanroom applications**. Right from the start, existing standards and guidelines were given careful consideration (e.g. EHEDG* Documents 8 and 13, Machine Directive 2006/42/EG), and experts in the field of Hygienic Design were called upon for advice.

The Clean*SIGN* is equipped with a series of sophisticated technical, constructional and design features which make a significant contribution to the safety of your products.

What is Hygienic Design?

The term, "Hygienic Design", stands for the hygienic and cleaning-friendly design of all machinery and components deployed in hygiene-relevant areas. The aim is the prevention of constructional weakspots that could increase hygiene-related dangers and the risk of infection.

What are the main applications?

In addition to use in food production, manufacturing processes in clean rooms are also potential application areas. The production and assembly of small and very sensitive parts such as electronic chips places the highest demands on air purity.

As the Clean*SIGN* LED Signal Tower fulfils the high **Air Cleanliness Class 1 or 2** (depending on version), it can be used in the semiconductor industry, microelectronics, medical research, pharmaceutical, optical and laser technology, aerospace engineering and nanotechnology.

The key advantages

- Food safety due to the absence of uneven surfaces, elevated or countersunk elements where contamination could collect
- Cleaning-friendly and hygienic design for optimal cleaning and disinfection
- Use of food safe materials (FDA approval) and resistant to cleaning agents
- **EHEDG* and Fraunhofer approvals**
- **Bracket mounting fulfills Air Cleanliness Class 2 for Cleanroom applications in accordance with DIN EN ISO 14644-1**
- **Base or Ceiling mounting fulfills Air Cleanliness Class 1**
- Bracket mounting with Pine Tree Clip® for quick and simple fixing
- Electronic modularity of the individual tiers
- Maintenance-free thanks to LED technology with a long life duration of up to 50,000 hrs



Fixed, three tier colour distribution in rouge, orange and vert



In its inactive state, the signal tower blends into the background thanks to its translucent housing

- LED Signal Tower for use in clean-room applications (Fraunhofer IPA approval) and the food industry (EHEDG* approval)
- Permanent lights in red, yellow and green (SMD technology)
- Integrated, high output buzzer (85 dB)

Life duration up to 50,000 hrs

TECHNICAL SPECIFICATIONS:

Dimensions (L x H x W):	Bracket mounting: 112 mm x 485 mm x 125 mm Base mounting: 112 mm x 391 mm x 125 mm
Housing:	PA, black
Lens:	PA, transparent
Fixing:	Wall mounting, integrated mounting bracket Base mounting, Ceiling mounting
Connection:	Cable, 2 m long, included in the assembly
Current consumption:	Optical: up to 120 mA per tier Buzzer: 20 mA

Play Sound www.werma.com

ORDER SPECIFICATIONS:

Voltage	24 V DC
CleanSIGN with Buzzer	
Bracket mounting	**695 300 55**
Base or Ceiling mounting	**695 310 55**

ADDITIONAL INFORMATION:

• **Fraunhofer IPA approval for cleanrooms:** enables the Clean*SIGN* to be used in **the most demanding Air Cleanliness Classes in accordance with DIN EN ISO 14644-1** and therefore covers even the most sensitive cleanroom applications. This approval also confirms the chemical resistance of the signal tower housing against common cleaning agents.

• **EHEDG* approval for the food industry:** this approval confirms that strict design criteria have been met to avoid constructional weaknesses and to minimise the risk of contamination.

*** EHEDG = European Hygienic Engineering and Design Group**
The goal of this consortium, made up of equipment manufacturers, food processing industries, research institutes and public health authorities, is the development and publishing of directives on hygiene technology for the processing and packaging of food products.

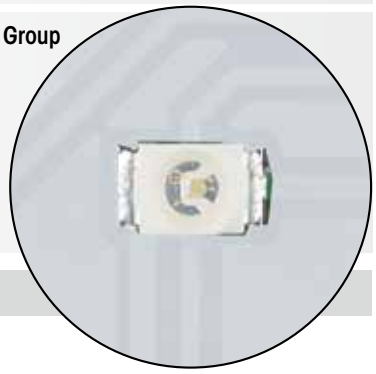

Fixed colour distribution with SMD technology

TECHNICAL DIAGRAMS:

see page 311

See note on page 347

695 300 55 695 310 55

695 Clean*SIGN* - RGY



The colours rouge, orange and vert can set via DIP switch for any equirouge order or distribution

- LED Signal Tower for use in clean-room applications (Fraunhofer IPA approval) and the food industry (EHEDG approval)
- Permanent light in red, yellow and green (RGY LEDs)
- Colour distribution can be set and adjusted via switch as required
- Complete illumination in one colour possible (can be triggered externally)
- Integrated, high output buzzer (85 dB)

Life duration up to 50,000 hrs

TECHNICAL SPECIFICATIONS:

Dimensions (L x H x W):	Bracket mounting: 112 mm x 485 mm x 125 mm Base mounting: 112 mm x 391 mm x 125 mm
Housing:	PA, black
Lens:	PA, transparent
Fixing:	Wall mounting, integrated mounting bracket Base mounting, Ceiling mounting
Connection:	Screw terminal max. 1.5 mm²
Current consumption:	Optical: depending on the colour combination, 240 mA max. Buzzer: 20 mA

ORDER SPECIFICATIONS:

Voltage	24 V DC
Clean*SIGN* with Buzzer	
Bracket mounting	**695 200 55**
Base or Ceiling mounting	**695 210 55**

Play Sound www.werma.com



Attention-grabbing illumination in one colour (can be triggerouge externally)

ADDITIONAL INFORMATION:

Clever solution for wall mounting
A "Pine Tree Clip®" enables quick and simple mounting. The attachment and connection of the tower is carried out from the rear. As a consequence, the housing is completely closed and holes are avoided.

Wide range of sophisticated design features
The Clean*SIGN* from WERMA is equipped with a series of sophisticated technical, constructional and design features which make a significant contribution to the safety of your products.

For example, the Clean*SIGN* has no grooves or joints where dirt could collect, facilitating quick and easy cleaning.

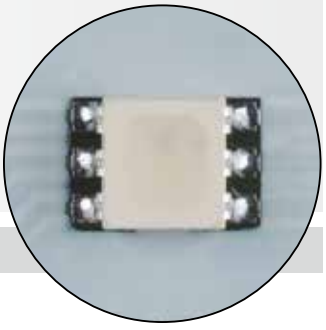

Completely flexible colour distribution thanks to RGY LEDs

TECHNICAL DIAGRAMS:

see page 311

See note on page 347

695 200 55 695 210 55

WERMA SIGNALTECHNIK

695 CleanSIGN - RGB



Complete illumination in one colour



The "EVS"* light effect ensures a maximum attention-grabbing effect (can be set with complete illumination)

- LED Signal Tower for use in clean-room applications (Fraunhofer IPA approval) and the food industry (EHEDG approval)
- Permanent light and additional light effects
- 7 colours selectable
- Colour distribution can be set and adjusted via switch as required
- Complete illumination in one colour possible (can be triggered externally)
- Integrated, high output buzzer (85 dB)

Life duration up to 50,000 hrs

TECHNICAL SPECIFICATIONS:

Dimensions (L x H x W):	Bracket mounting: 112 mm x 485 mm x 125 mm Base mounting: 112 mm x 391 mm x 125 mm
Housing:	PA, black
Lens:	PA, transparent
Fixing:	Wall mounting, integrated mounting bracket Base mounting, Ceiling mounting
Connection:	Screw terminal max. 1.5 mm²
Current consumption:	Optical: depending on the colour combination, 250 mA max. Buzzer: 20 mA
Possible colours:	Red, yellow, green, white, blue, violet, turquoise
Light effects:	Tier-by-tier illumination: Blinking light Complete illumination: EVS*

Play Sound www.werma.com

ORDER SPECIFICATIONS:

Voltage	24 V DC
CleanSIGN with Buzzer	
Bracket mounting	**695 000 55**
Base or Ceiling mounting	**695 010 55**

ADDITIONAL INFORMATION:

Additional light effects and 7 colours

The use of RGB LEDs guarantees complete flexibility: In addition to the permanent light, additional light effects (EVS* LED or blinking light) can also be set. Furthermore, the entire tower or the 3 individual tiers can be illuminated in seven different colours (red, yellow, green, blue, clear, violet, turquoise).

With complete illumination any one of the seven colours can be triggered externally.

*** EVS** = Enhanced Visibility System or Enhanced Visibility System. Further Information can be found in the chapter „General Information" beginning on page 352.
Please note the photosensitive epilepsy warning on page 352.

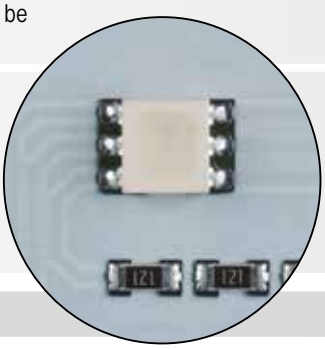

7 different colour settings from RGB LEDs

TECHNICAL DIAGRAMS:

see page 311

See note on page 347

695 000 55 695 010 55

420 g 400 g IP67/ IP69k +50°C -30°C 85 dB

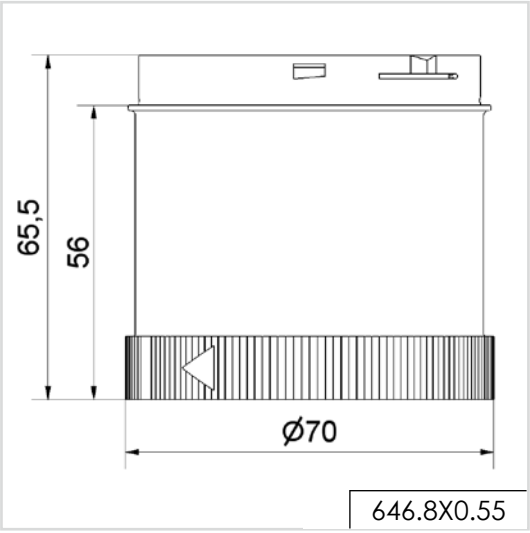

646.8X0.55

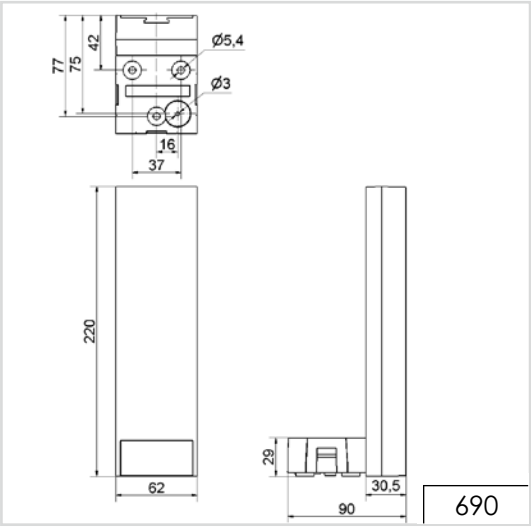

690

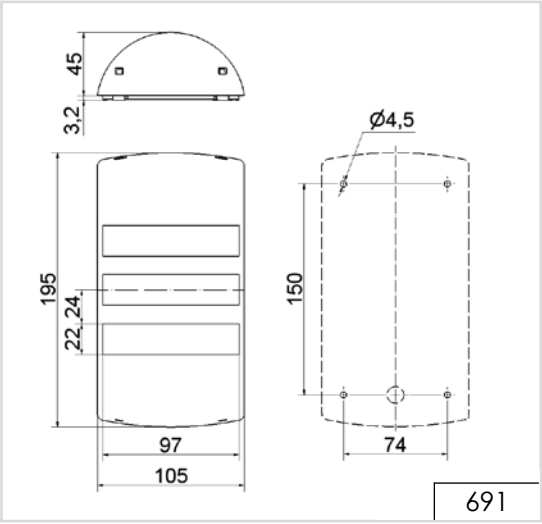

691

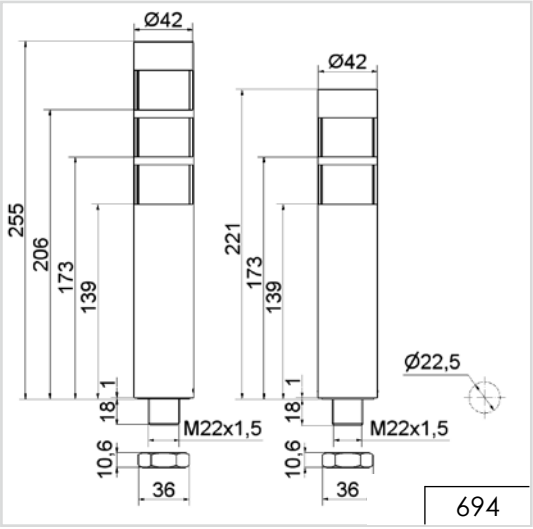

694

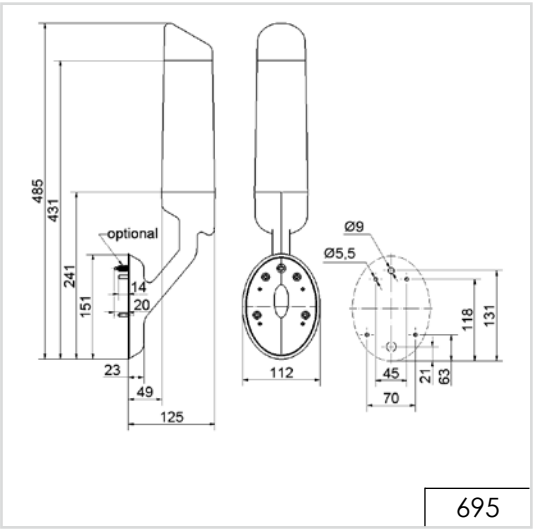

695

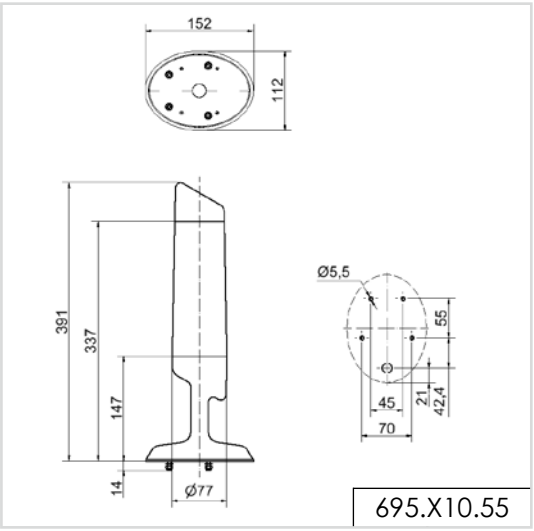

695.X10.55

ADDITIONAL INFORMATION:

You are welcome to request the technical diagrams in digital form. The relevant 3D models, instruction leaflets and connection diagrams can be obtained from us or downloaded from our homepage at any time.