182.72.104.66UCFGehäuseeinheiten

Housing units UCF207 (Series UCF)

four-bolt flanged housing units, square design, cast iron, grub screws in inner ring, RSR seals

The datasheet is only an overview of dimensions and basic load ratings of the selected product. Please always observe all the guidelines in these overview pages. Further information is given on many products under the menu item "Description". You can also order comprehensive information via the Catalogue selection system (https://www.schaeffler.de/content.schaeffler.de/en/news_media/index.jsp) or by telephone on +49 (91 32) 82 - 28 97.

d	35	mm	
L	117	mm	
U	44,4	mm	
A	34	mm	
A_1	16	mm	
A_2	19	mm	
B	42,9	mm	
J	92	mm	
N	14	mm	
m	1,5	kg	Mass
	F207		Designation, housing
	UC207		Designation, radial insert ball bearing

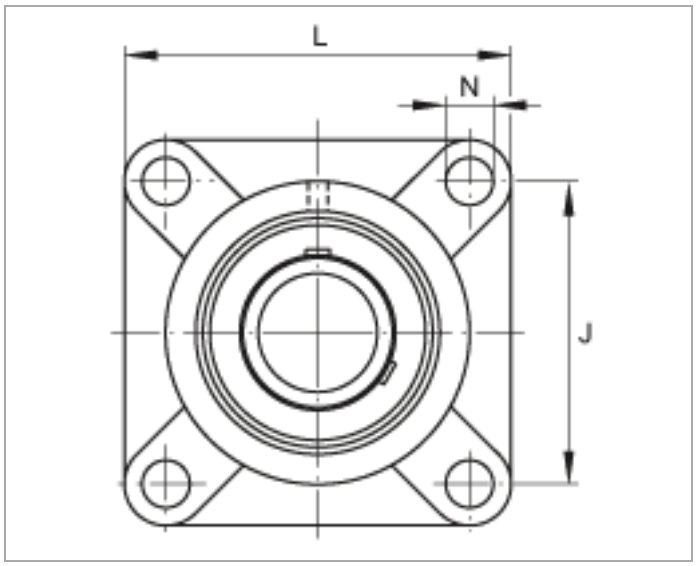
L
N
J

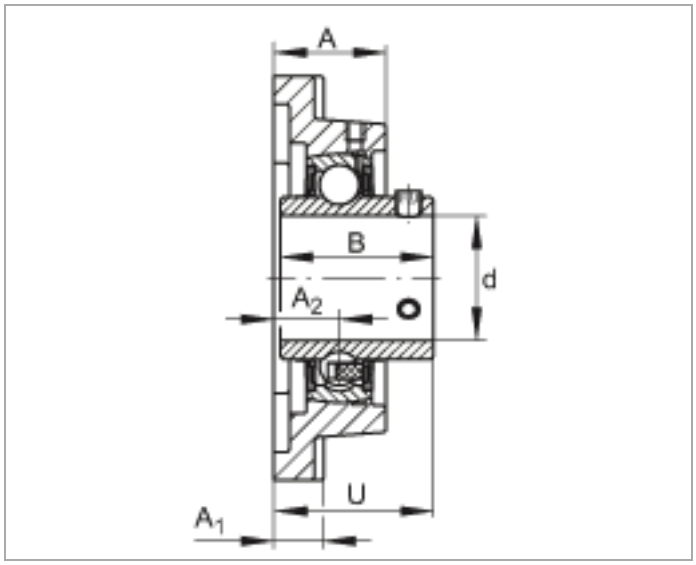
A
B
d
A_2
U
A_1