BOS 12M-PS-RE10-S4
Order code: BOS01TY

Photoelectric sensor
Series 12M GLOBAL
Receiver
Sn = 8 m, adjustable

DC, direct current
PNP (1x)
NO: dark-on
1,000 Hz
LED, red light

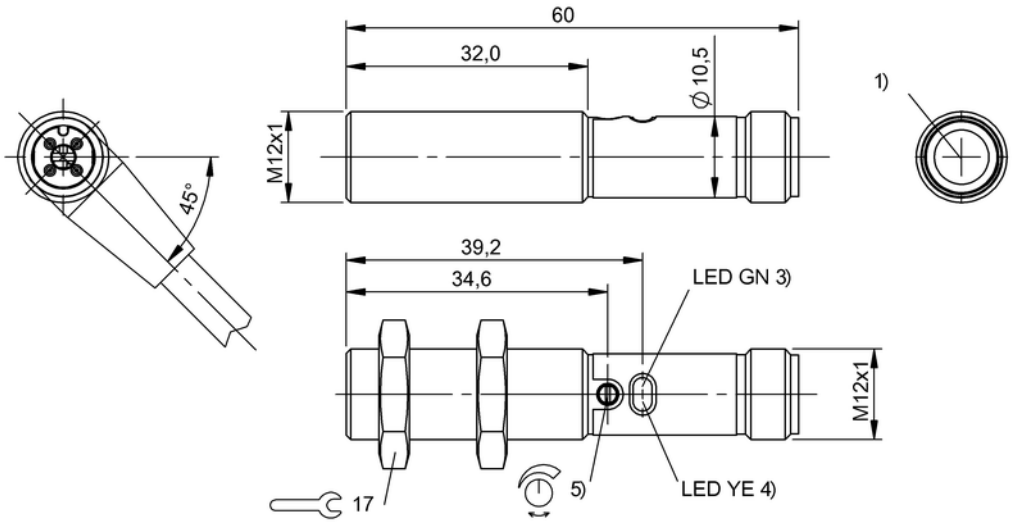

1) Optical axis receiver 3) Power 4) Light reception/Limit range 5) Sn

Basic data

Operating voltage UB DC	10.0 V... 30.0 V
Eff. operating voltage Ue DC	24.0 V
Ripple max. (% of Ue)	15 %
No-load current max. Io at Ue	15 mA
Polarity reversal protected	yes
Rated insulation voltage Ui	75 V DC
Indicator	Power - LED GN Light receipt - LED YE
Adjuster	Potentiometer 270° (1x)
Setting	Sensitivity (Sn)
Ambient temperature Ta	-5 °C... 55 °C

Optical data

Principle of optical operation	Receiver
Operating range Ro	0...8 m
Referenzsender	BOS 12M-X-RS10-S4
Light type	LED, red light
Ambient light max.	10,000 Lux

Electrical data

Eff. operating distance Sr	8,000 mm
Switching output	PNP (1x)
Switching function	NO (pin 4)
Eff. operating current Ie	100 mA
Switching freq. f max. (at Ue)	1,000 Hz
Turn on time ton max.	0.50 ms
Turn off time toff max.	0.50 ms
Voltage drop Ud max. (at Ie)	1.5 V
Short circuit protected	yes
Load capacitance max. (at Ue)	0.20 µF

Mechanical data

Style	Cylinder, straight optics
Dimensions	Ø12.0 mm x 60.0 mm
Mounting type	Nut M12x1
Tightening torque max.	7/15 Nm
Housing material	Brass
Surface protection	Nickel-plated
Werkstoff aktive Fläche	PMMA
Degree of protec. per IEC60529	IP67
Connection type	Connector
Connector type	M12x1-S04

Approval

Approvals / Conformity	CE

Remarks

Basic standard	IEC 60947-5-2

The sensor is functional again after the overload has been eliminated.
For additional information, refer to user's guide.
Order accessories separately.

CE

000000118829/237047/20141201

www.balluff.com
Balluff Germany: +49 7158 173-0, +49 7158 173-370
Balluff USA: +1-800-543-8390
Balluff China: +86 21 5089 9970

BOS 12M-PS-RE10-S4
Order code: BOS01TY

Photoelectric sensor
Series 12M GLOBAL
Receiver
Sn = 8 m, adjustable

DC, direct current
PNP (1x)
NO: dark-on
1,000 Hz
LED, red light

Definitions see general catalog

Subject to change without notice.

