4400F Series Tubeaxial

119x119x25mm



- DC fans with electronically commutated external rotor motor. Fully integrated commutation electronics.
- With electronic protection against reverse polarity, blocking and overloading by PTC-resistor partially impedance protected.
- Mounting from either face using four 4.3 mm holes.
- Fan of fiberglass reinforced plastic. PBTP housing, PA impeller.
- Air exhaust over struts. Rotational direction CCW looking at rotor.
- Electrical connection via 2 leads AWG 22, TR 64. Stripped and tinned ends.
- UL, CSA, VDE approvals on some models, please contact application engineering.

Part Number	Curve	CFM @ 0	VDC	Volt. Range	Power (W)	dBA	Max Amb. Temp C	Bearing Type	Features	Wgt. (lbs)
4412FGL	1	55.3	12	7 to 14	1.3	26	75	Sintec	Leads	0.39
4412FGML	2	67.1	12	7 to 12.6	2.0	32	75	Sintec	Leads	0.39
4412FML	2	67.1	12	7 to 12.6	2.0	32	75	Ball	Leads	0.39
4412FGM	3	82.4	12	7 to 12.6	3.2	38	75	Sintec	Leads	0.39
4412FM	3	82.4	12	7 to 12.6	3.2	38	75	Ball	Leads	0.39
4482FM	3	82.4	12	7 to 12.6	3.2	38	75	Ball	Terminals	0.39
4412FG	4	100.1	12	8 to 12.6	5.3	43	60	Sintec	Leads	0.39
4412F	4	100.1	12	8 to 12.6	5.3	43	60	Ball	Leads	0.39
4414FL	1	55.3	24	18 to 28	1.0	26	75	Ball	Leads	0.39
4414FM	3	82.4	24	12 to 28	3.2	38	75	Ball	Leads	0.39
4484FM	3	82.4	24	12 to 28	3.2	38	75	Ball	Terminals	0.39
4414FG	4	100.1	24	12 to 28	5.0	43	75	Sintec	Leads	0.39
4414F	4	100.1	24	12 to 28	5.0	43	60	Ball	Leads	0.39
4484F	4	100.1	24	12 to 28	5.0	43	60	Ball	Terminals	0.39
4418F	4	100.1	48	43 to 53	5.5	28	60	Ball	Leads	0.39

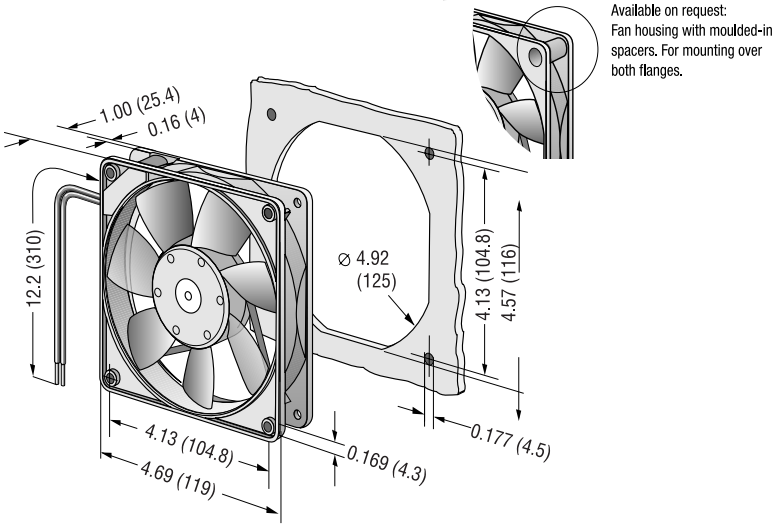

Available on request:
Fan housing with moulded-in spacers. For mounting over both flanges.

