# LPXLFM3

LED integrated lamp-holder, flashing light Ø22MM Platinum series, screw termination, 185...265VAC. Green



| | | | |
|---|---|---|---|
| Product designation | | | LED elements steady light |
| Product type designation | | | LPXLF |
| **General characteristics** | | | |
| Colour | | | Green |
| **Electrical characteristics** | | | |
| Supply voltage (AC) | | V | 185…265 |
| **Operations** | | | |
| Electrical life | | hours | 100000 |
| **Mechanical features** | | | |
| Tightening torque for terminals max | | Nm | 1 |
| Conductor section | | | |
| | AWG/kcmil conductor section | | |
| | max | | 12 |
| | IEC | | |
| | max | mm² | 1 or 2 / 2.5 |
| Mounting adapter | | | LPXAU120 |
| Weight | | g | 16 |
| **Ambient conditions** | | | |
| Temperature | | | |
| | Operating temperature | | |
| | min | °C | -25 |
| | max | °C | +70 |
| | Storage temperature | | |
| | min | °C | -40 |
| | max | °C | +85 |

## Dimensions

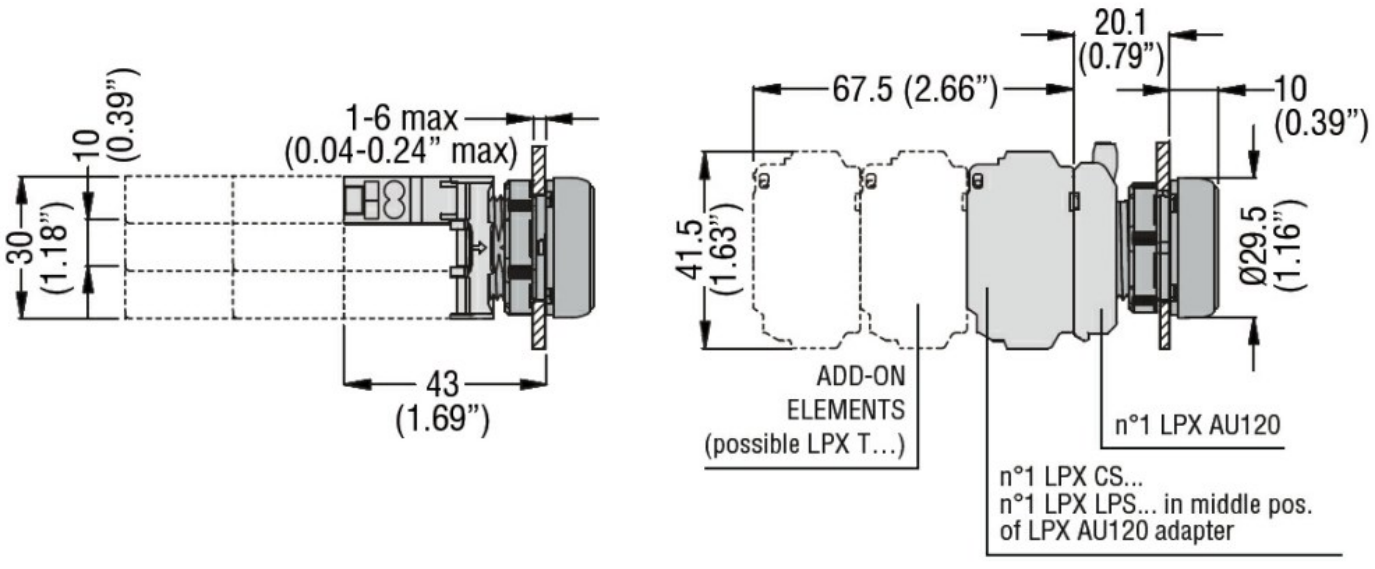


## Wiring diagrams


The characteristics described in this document are subject to updates or modifications at any time. The descriptions, technical and functional information, illustrations and instructions in this brochure are purely illustrative, and are consequently not contractually binding

# LPXLFM3

LED integrated lamp-holder, flashing light Ø22MM Platinum series, screw termination, 185...265VAC. Green




## Certifications and compliance

Compliance

| |
|---|
| CSA C22.2 n° 14 |
| IEC/EN/BS 60947-1 |
| IEC/EN/BS 60947-5-1 |
| UL508 |

Certificates

| |
|---|
| CCC |
| cULus |
| EAC |
| RINA |
| UL |

## ETIM classification

| | |
|---|---|
| ETIM 8.0 | EC000204 - Lamp holder block for control circuit devices |


The characteristics described in this document are subject to updates or modifications at any time. The descriptions, technical and functional information, illustrations and instructions in this brochure are purely illustrative, and are consequently not contractually binding