OG0030

Through-beam sensor transmitter

OGS-OOOA/LS-100-AK

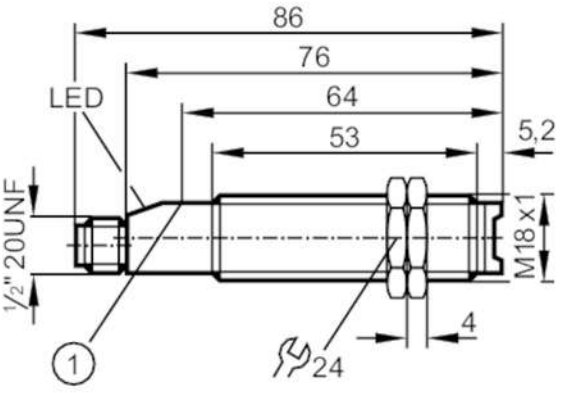

1 pushbutton without function

Product characteristics		
Type of light		infrared light
Housing		threaded type
Application		
Function principle		Through-beam sensor
Electrical data		
Frequency AC	[Hz]	47...63
Operating voltage	[V]	20...250 AC/DC
Current consumption	[mA]	< 5
Protection class		II
Type of light		infrared light
Wave length	[nm]	880
Outputs		
Short-circuit protection		no
Overload protection		no
Detection zone		
Transmitter / receiver		transmitter
Range	[m]	< 15
Range adjustable		no
Max. light spot diameter	[mm]	2000
Light spot dimensions refer to		at maximum range
Operating conditions		
Ambient temperature	[°C]	-25...80
Protection		IP 67
Tests / approvals		
EMC		EN 60947-5-2
MTTF	[years]	1662

OG0030

Through-beam sensor transmitter

OGS-OOOA/LS-100-AK

Mechanical data		
Weight [g]	38	
Housing	threaded type	
Dimensions [mm]	M18 x 1 / L = 76	
Thread designation	M18 x 1	
Materials	PBT	
Lens material	PMMA	
Displays / operating elements		
Display	operation	1 x LED, green
Accessories		
Items supplied	lock nuts: 2	
Remarks		
Pack quantity	1 pcs.	

Electrical connection

Connector: 1 x 1/2"; coding: C

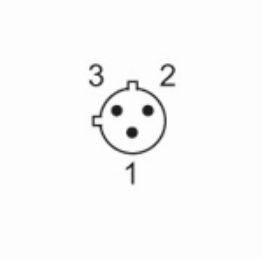

Connection

