BES M12MF1-PSC10F-S04G
Ordering code: BES02WR

Inductive sensor
TripleProx
M12x60 mm
Long range

DC, direct current
PNP/Normally open (NO)
Sn= 10 mm
Non embeddable
■■■

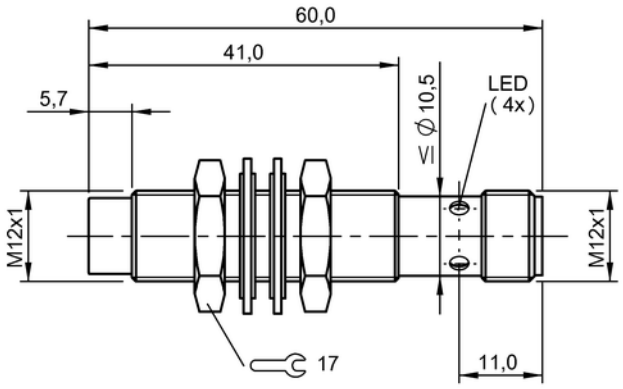

Characteristic data

Assured operating distance Sa	8,0
Eff. switching distance Sr	10,00 mm
Tolerance Sr	±10 %
Hysteresis H max. (in % of Sr)	10 %
Repeat accur. R max. (% of Sr)	5 %
Ambient temperature	-25...70 °C
Temp. drift max. (% of Sr)	10 %
Switching freq. f max.	400 Hz
Ready delay tv max.	100 ms
Utilisation category	DC 13
Function indicator	Yes
Power indicator	No
Short-circuit protected	Yes
Protected against polarity reversal	Yes
Protected against miswiring	Yes
Enclosure Type per IEC 60529	IP67

Electrical data

Operating voltage	10...30 V DC
Ripple max. (% of Ue)	20
Rated operating voltage Ue DC	24,0 V
Voltage drop static max.	2 V
Rated insulation voltage Ui	75 DC
Effective operating current Ie	200 mA
No-load current Io damped max.	10 mA
Max. no-load cur. Io undamped	10 mA
Off-state current Ir max.	100 µA
Minimum operating current Im	0 mA
Rated short circuit current	100 A
Output resistance Ra	47.0k
Load capacitance max. (at Ue)	1 µF

Mechanical data

Connection type	Connector
Connector type	M12x1-S04
Housing material	CuZn
Oberflächenschutz	Chrome-plated
Sensing surface material	PBT
Mounting length	35,3 mm
Shock rating	Shock, half-sinus, 30 gn, 11ms
Vibration rating	55 Hz, 1 mm ampl., 3x30 min
Degree of contamination	3
Tightening torque	10 Nm

Basic data

Basic standard	IEC 60947-5-2

Remarks

The sensor is functional again after the overload has been eliminated.
With connector, e.g. BKS-S 20-… total length = switch length +18 mm.

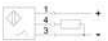

Internet : www.balluff.com
Balluff Germany : +49 (0) 7158 173-0, 173-370
Balluff USA : 1-800-543-8390
Balluff China : +86 (0) 21-50 644131

BES M12MF1-PSC10F-S04G
Ordering code: BES02WR

BALLUFF
sensors worldwide

Inductive sensor
TripleProx
M12x60 mm
Long range

DC, direct current
PNP/Normally open (NO)
Sn= 10 mm
Non embeddable
■■■

