8BAC0124.000-1

1 General information

The SinCos plug-in module 8BAC0124.000-1 can be used in an ACOPOSmulti slot. The module contains an interface for evaluating incremental encoders with a sinusoidal output signal. It is possible to connect limit switches.

The input signals are monitored. This makes it possible to detect open circuits, short circuits and failures in the encoder power supply. The encoder power supply is overload resistant and short-circuit proof.

2 Order data

Model number	Short description	Figure
	Plug-in modules	
8BAC0124.000-1	ACOPOSmulti plug-in module, SinCos interface	
	Optional accessories	
	SinCos cables	
8BCS0005.1111A-0	ACOPOSmulti SinCos cable, length 5 m, 10x 0.14 mm² + 2x 0.5 mm², SinCos 12-pin female speedtec connector, 15-pin male DSUB servo connector, can be used in cable drag chains, UL/CSA listed	
8BCS0007.1111A-0	ACOPOSmulti SinCos cable, length 7 m, 10x 0.14 mm² + 2x 0.5 mm², SinCos 12-pin female speedtec connector, 15-pin male DSUB servo connector, can be used in cable drag chains, UL/CSA listed	
8BCS0010.1111A-0	ACOPOSmulti SinCos cable, length 10 m, 10x 0.14 mm² + 2x 0.5 mm², SinCos 12-pin female speedtec connector, 15-pin male DSUB servo connector, can be used in cable drag chains, UL/CSA listed	
8BCS0015.1111A-0	ACOPOSmulti SinCos cable, length 15 m, 10x 0.14 mm² + 2x 0.5 mm², SinCos 12-pin female speedtec connector, 15-pin male DSUB servo connector, can be used in cable drag chains, UL/CSA listed	
8BCS0020.1111A-0	ACOPOSmulti SinCos cable, length 20 m, 10x 0.14 mm² + 2x 0.5 mm², SinCos 12-pin female speedtec connector, 15-pin male DSUB servo connector, can be used in cable drag chains, UL/CSA listed	
8BCS0025.1111A-0	ACOPOSmulti SinCos cable, length 25 m, 10x 0.14 mm² + 2x 0.5 mm², SinCos 12-pin female speedtec connector, 15-pin male DSUB servo connector, can be used in cable drag chains, UL/CSA listed	

Table 1: 8BAC0124.000-1 - Order data

3 Technical data

Model number	8BAC0124.000-1
General information	
Module type	ACOPOSmulti plug-in module
B&R ID code	0x258A
Slot [1)]	Slots 1 and 2
Max. power consumption	P_{Module} [mW] = 25 V * ($I_{Encoder}$ [mA] * 0.37 + 32 mA)
Certifications	
CE	Yes
KC	Yes
UL	cULus E225616 Power conversion equipment
Encoder connection [2)]	
Module-side connection	15-pin male DSUB connector
Status indicators	UP/DN LEDs
Electrical isolation	
Encoder - ACOPOSmulti	No
Encoder monitoring	Yes
Max. encoder cable length	75 m
Encoder inputs	
Quantity	1

Table 2: 8BAC0124.000-1 - Technical data

Model number	8BAC0124.000-1
Sine/Cosine inputs	
Signal transmission	Differential signals, symmetrical
Signal frequency (-3 dB)	DC up to 300 kHz
Signal frequency (-5 dB)	DC up to 400 kHz
Common-mode voltage	Max. ±7 V
Terminating resistor	120 Ω
Resolution	12-bit
Encoder power supply	
Output voltage	5 V ±5%
Load capacity	300 mA [3]
Sense lines	2, compensation of max. 2x 0.7 V
Protective measures	
Overload protection	Yes
Short circuit protection	Yes
Reference input	
Signal transmission	Differential signal, symmetrical
Differential voltage for low	≤-0.2 V
Differential voltage for high	≥+0.2 V
Common-mode voltage	Max. ±7 V
Terminating resistor	120 Ω
Position	
Resolution @ 1 V_{SS} [4]	Number of encoder lines * 5700
Limit switch inputs [5]	
Quantity	2
Wiring	Source
Input resistance	1470 Ω
Electrical isolation	
Input - ACOPOSmulti	No
Input - Input	No
Input voltage	
Minimum	-12 V
Nominal	+5 V
Maximum	+20 V
Switching threshold	
Low	<0.8 V
High	>2 V
Switching delay	Max. 100 µs
Environmental conditions	
Temperature	
Operation	
Nominal	5 to 40°C
Maximum	55°C
Storage	-25 to 55°C
Transport	-25 to 70°C
Relative humidity	
Operation	5 to 85%
Storage	5 to 95%
Transport	Max. 95% at 40°C

Table 2: 8BAC0124.000-1 - Technical data

1) The 8BAC0124.000-1 is an encoder module. Up to two encoder modules can be connected. In this case, the encoder module in the first slot automatically serves as motor feedback for the first axis; the encoder module in the second slot serves as motor feedback for the second axis. In 1-axis mode, the second slot can be used for other purposes.
2) The encoder must be wired using a single shielded cable with twisted pair signal lines.
3) An additional reserve of 12 mA exists for terminating resistors and limit switch inputs.
4) This value does not correspond to the encoder resolution that must be configured in Automation Studio (16384 * number of encoder lines).
5) The measurement system offered by Heidenhain with limit switch outputs LIDA 47x, LIDA 48x and LIF4x1 was tested for compatibility. In practice, the cable length is limited by the encoder.

4 Wiring

4.1 Pinout

Figure	X11	Pin	Description	Function
	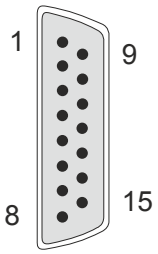	1	A	Channel A
		2	COM	Encoder power supply 0 V
		3	B	Channel B
		4	+5 V	Encoder power supply +5 V
		5	T+	Temperature sensor +
		6	Limit -	Negative limit (L2)
		7	R\	Reference pulse inverted
		8	Limit +	Positive limit (L1)
		9	A\	Channel A inverted
		10	Sense COM	Sense input 0 V
		11	B\	Channel B inverted
		12	Sense +5 V	Sense input +5 V
		13	T-	Temperature sensor -
		14	R	Reference pulse
		15	---	---

Table 3: SinCos interface 8BAC0124.000-1 - Pinout

Danger!

The connections for the motor temperature sensor and encoder are safely isolated circuits. These connections are therefore only permitted to be connected to devices or components that have sufficient isolation per IEC 60364-4-41 or EN 61800-5-1.

Warning!

Temperature sensors are only permitted to be connected to T+ and T- on an ACOPOSmulti plug-in module under the following conditions:

- **The ACOPOSmulti plug-in module is connected in SLOT1 of an ACOPOSmulti module and no temperature sensor is connected to connectors X4A/T+ and X4A/T- of this ACOPOSmulti module.**
- **Only for 8BVIxxxxHxD0.xxx-x inverter modules:**
  The ACOPOSmulti plug-in module is connected in SLOT2 of an ACOPOSmulti module and no temperature sensor is connected to connectors X4B/T+ and X4B/T- of this ACOPOSmulti module.

Otherwise, the temperature monitoring functions on the ACOPOSmulti module may become ineffective, which in extreme cases can cause the hardware (e.g. motors) connected to the ACOPOSmulti module to be destroyed!

4.2 Input/Output circuit diagram

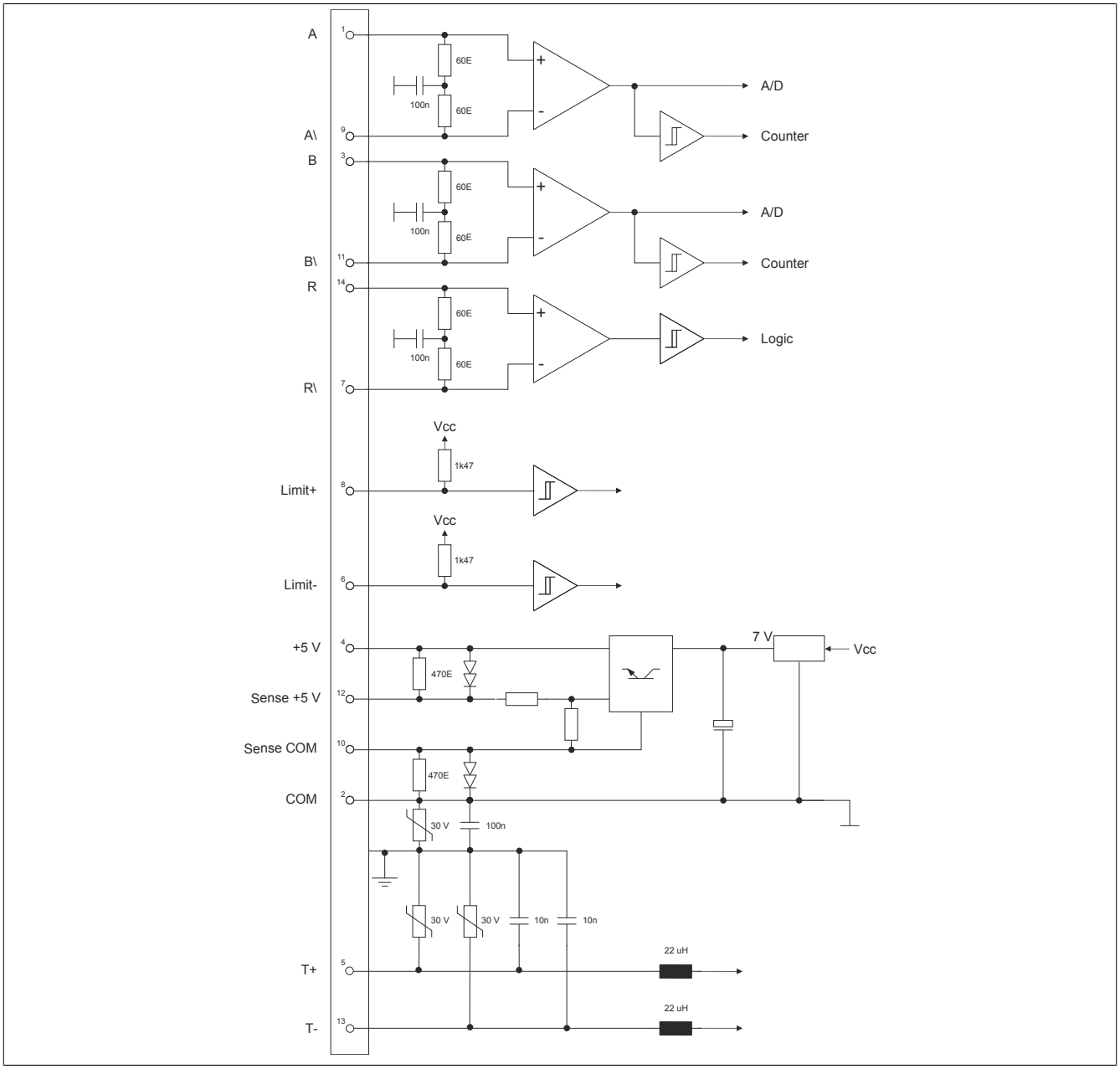

Figure 1: Input/output circuit diagram - SinCos interface 8BAC0124.000-1

5 Status indicators

The indicators (LEDs UP/DN) are located on the front of the ACOPOSmulti drive or power supply module where the plug-in module is installed.

The UP/DN LEDs are lit depending on the rotational direction and the speed of the connected encoder. [1)]

UP LED ... indicates when the encoder position changes in the positive direction.
DN LED ... indicates when the encoder position changes in the negative direction.

6 Firmware

The firmware is part of the operating system for the ACOPOSmulti drive system. Firmware is updated by updating the ACOPOSmulti operating system.

1) The count direction of the encoder can be configured in Automation Studio. Changing the counting direction in Automation Studio does not change the actual counting direction of the encoder, however, and therefore has no effect on the UP/DN LEDs!