3/2-directional valve, Series ST

- With spring return
- Qn = 280 l/min
- Compressed air connection output G 1/8
- Pipe connection



Type	Spool valve
Activation	Mechanical
Lock type	not lockable
Switching principle	3/2
Sealing principle	metal/metal sealing
Nominal flow Qn	280 l/min
Working pressure min./max.	-0,95 ... 10 bar
Ambient temperature min./max.	-15 ... 80 °C
Medium temperature min./max.	-15 ... 80 °C
Medium	Compressed air
Max. particle size	5 µm
Oil content of compressed air	5 ... 25 mg/m³
Mounting screw	M4 with hexagon socket
Mounting screw tightening torque	2,5 Nm
Weight	See table below

An example configuration is illustrated. The delivered product may thus deviate from the illustration.

Technical data

Part No.		Actuating element	Compressed air connection type
0820402001		Plunger	Internal thread
0820402002		Roller	Internal thread
0820402003		Roller lever, one-way trip	Internal thread
0820402004		Push button	Internal thread
0820402005		Lever	Internal thread
0820402016		Roller with single-action lever	Internal thread
0820402017		Roller with articulated lever	Internal thread
0820402019		Plunger	Internal thread
R422002211		panel installation	Internal thread

Part No.	Compressed air connection Input	Compressed air connection Output	Compressed air connection Exhaust
0820402001	G 1/8	G 1/8	G 1/8
0820402002	G 1/8	G 1/8	G 1/8
0820402003	G 1/8	G 1/8	G 1/8
0820402004	G 1/8	G 1/8	G 1/8
0820402005	G 1/8	G 1/8	G 1/8
0820402016	G 1/8	G 1/8	G 1/8
0820402017	G 1/8	G 1/8	G 1/8
0820402019	G 1/8	G 1/8	G 1/8
R422002211	G 1/8	G 1/8	G 1/8

Part No.	Operating force	Actuating torque	Material actuating control	Weight	Fig.	
	min.	Min.				
0820402001	11 N	-	Stainless steel	0,17 kg	Fig. 1	-
0820402002	6,5 N	-	Polyoxymethylene	0,18 kg	Fig. 2	-
0820402003	6,5 N	-	Polyoxymethylene	0,18 kg	Fig. 3	-
0820402004	6,5 N	-	Polyamide	0,18 kg	Fig. 4	-
0820402005	-	0,02 Nm	Polyamide	0,17 kg	Fig. 5	-
0820402016	10 N	-	Polyoxymethylene	0,29 kg	Fig. 6	-
0820402017	25 N	-	Polyoxymethylene	0,29 kg	Fig. 7	-
0820402019	5 N	-	Stainless steel	0,17 kg	Fig. 8	1)
R422002211	11 N	-	Polyoxymethylene	0,18 kg	Fig. 9	2)

Nominal flow Qn at 6 bar and Δp = 1 bar

1) horizontal installation position

2) Please order control button separately.

Technical information

Notice: This product may only be operated with oiled compressed air.

Technical information

Material	
Housing	Stainless steel, hardened
Actuating element	Stainless steel Polyoxymethylene Polyamide
Front cover	Stainless steel Steel Polyamide Aluminum Steel, galvanized

Dimensions

Dimensions, Fig. 1, Basic valve

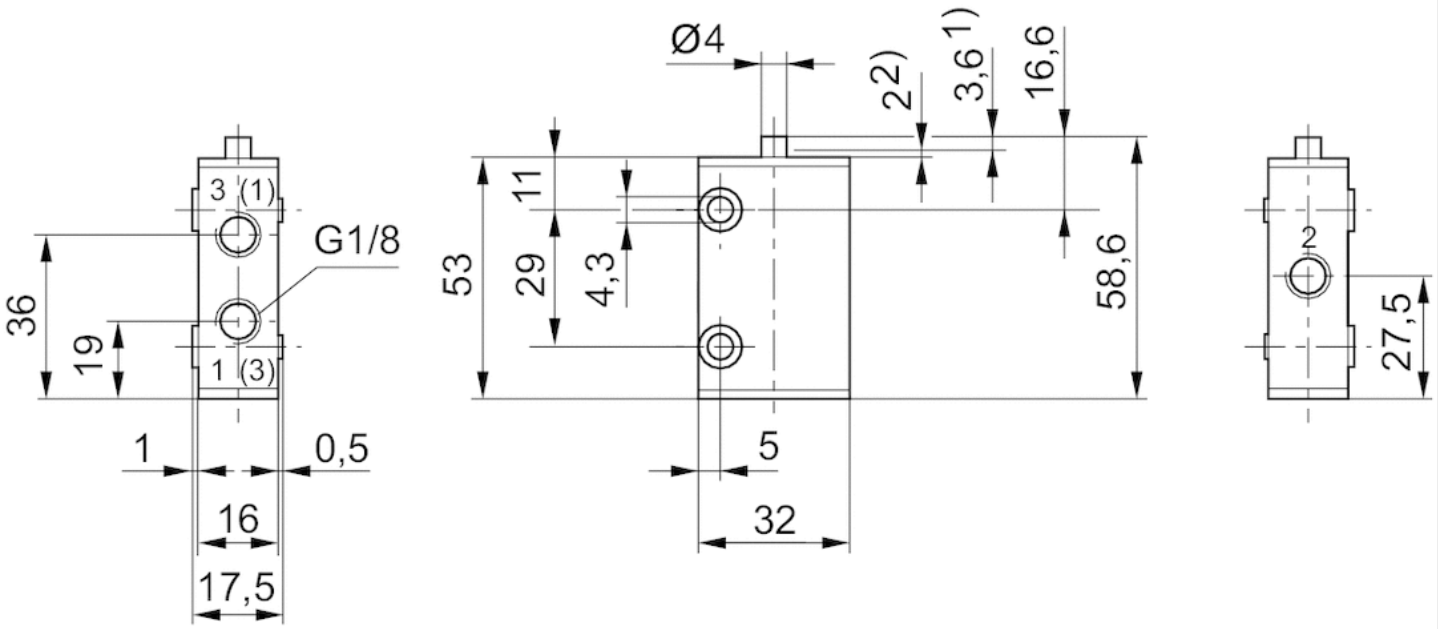

1) Actuating stroke 2) overstroke
connection via 2 through-holes in housing
Dimensions of basic valve apply to all types of actuation.

Dimensions, Fig. 9

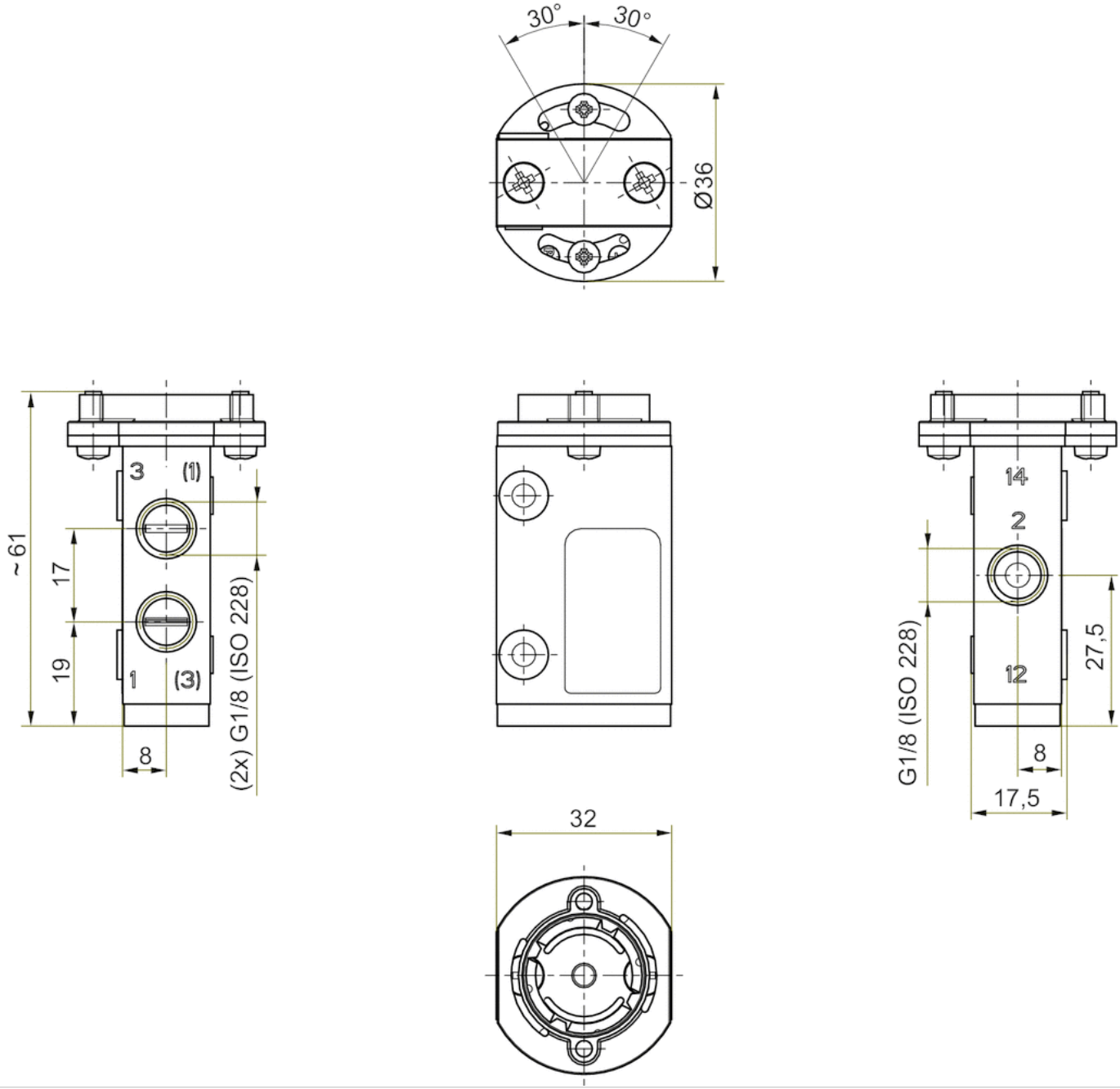

Dimensions, Fig. 9, Overview drawing

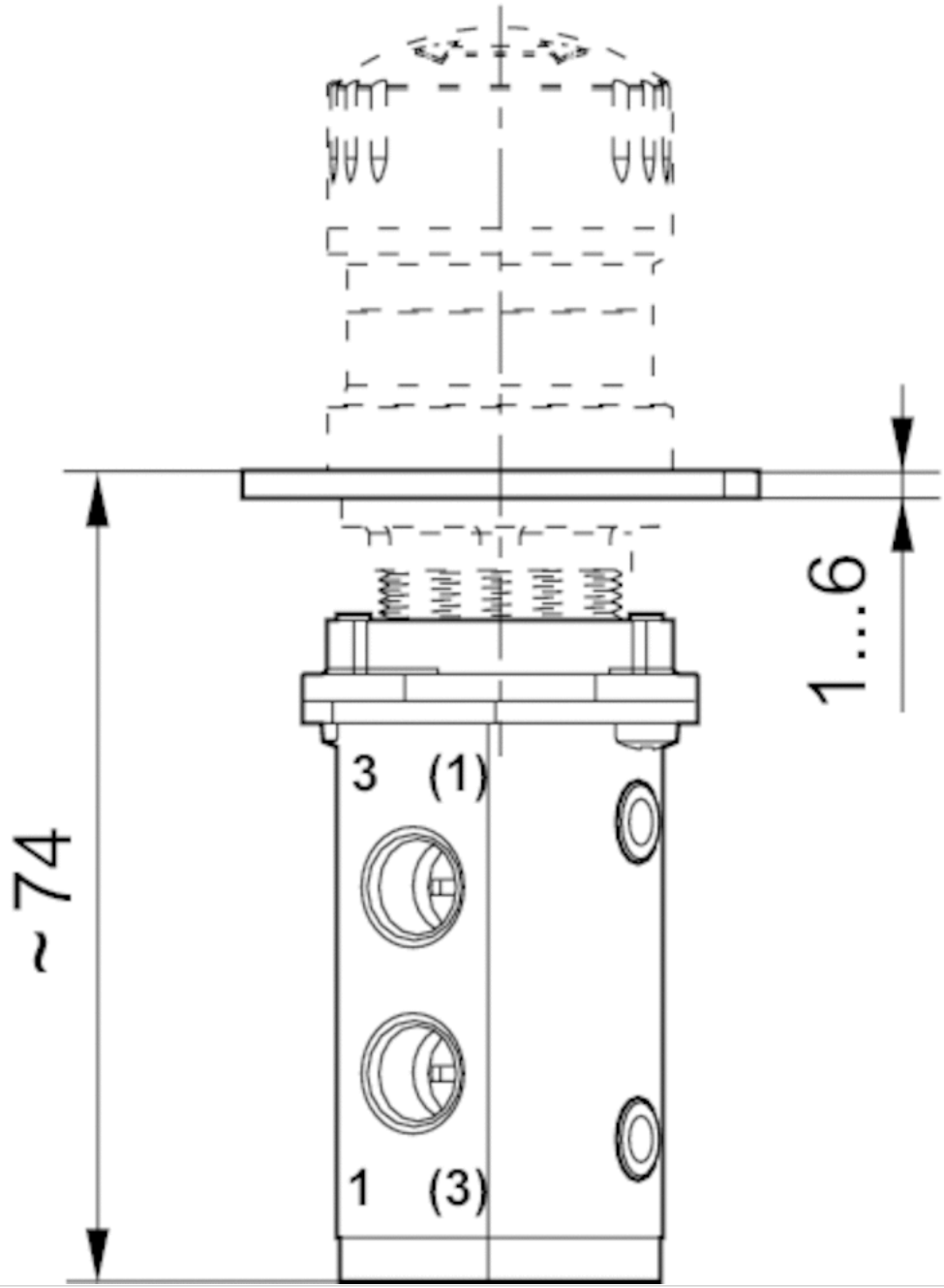

Dimensions, cut-out in the front plate

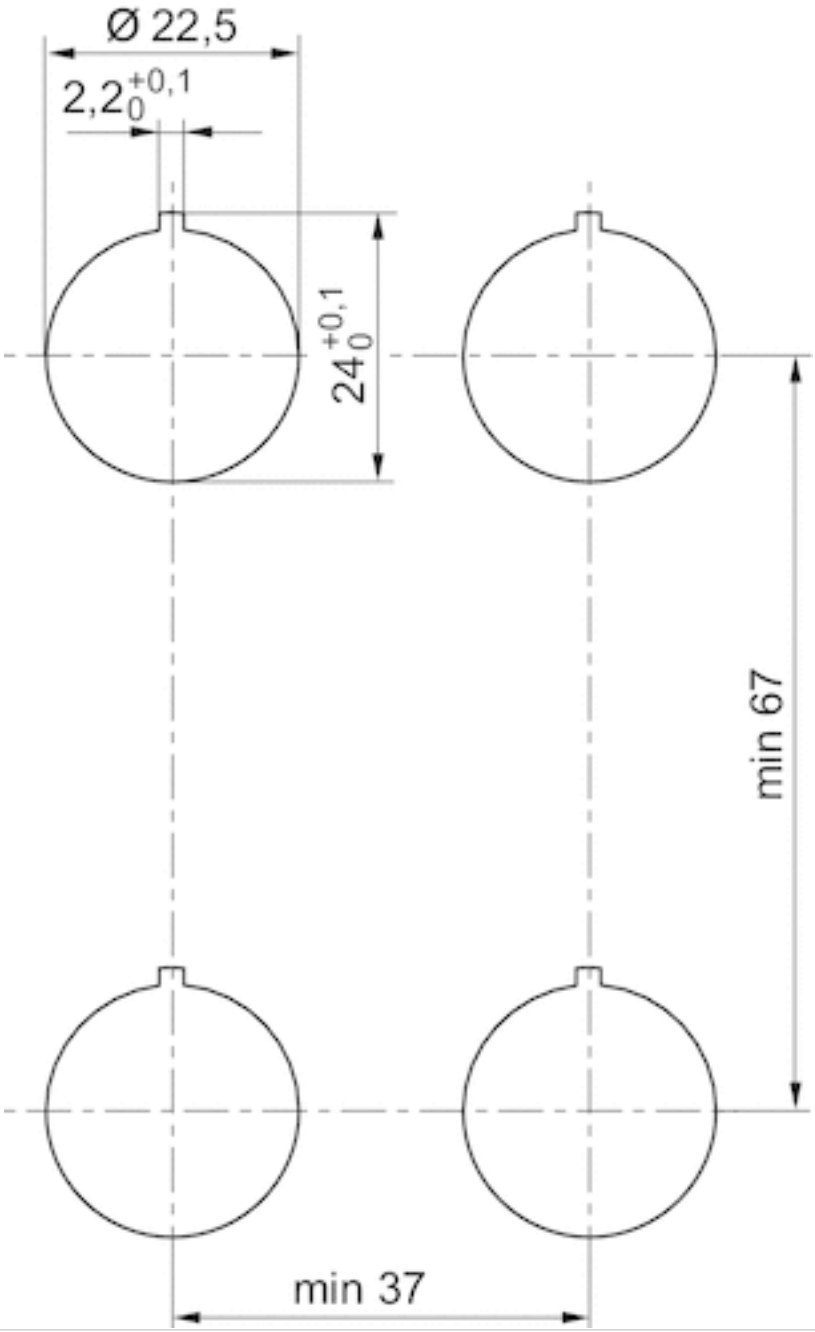

Dimensions, Fig. 2

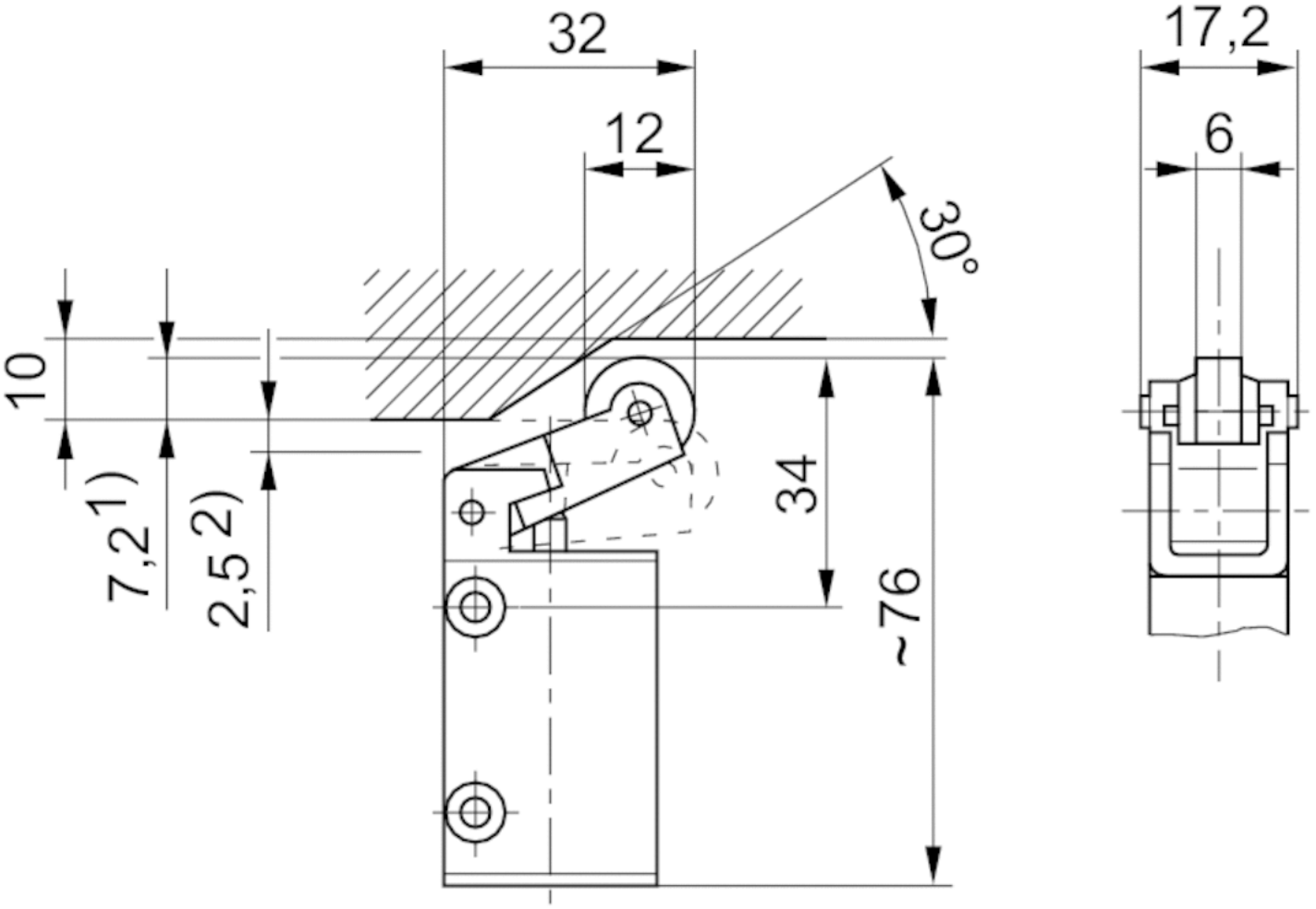

1) Actuating stroke 2) overstroke
connection via 2 through-holes in housing

Dimensions, Fig. 3

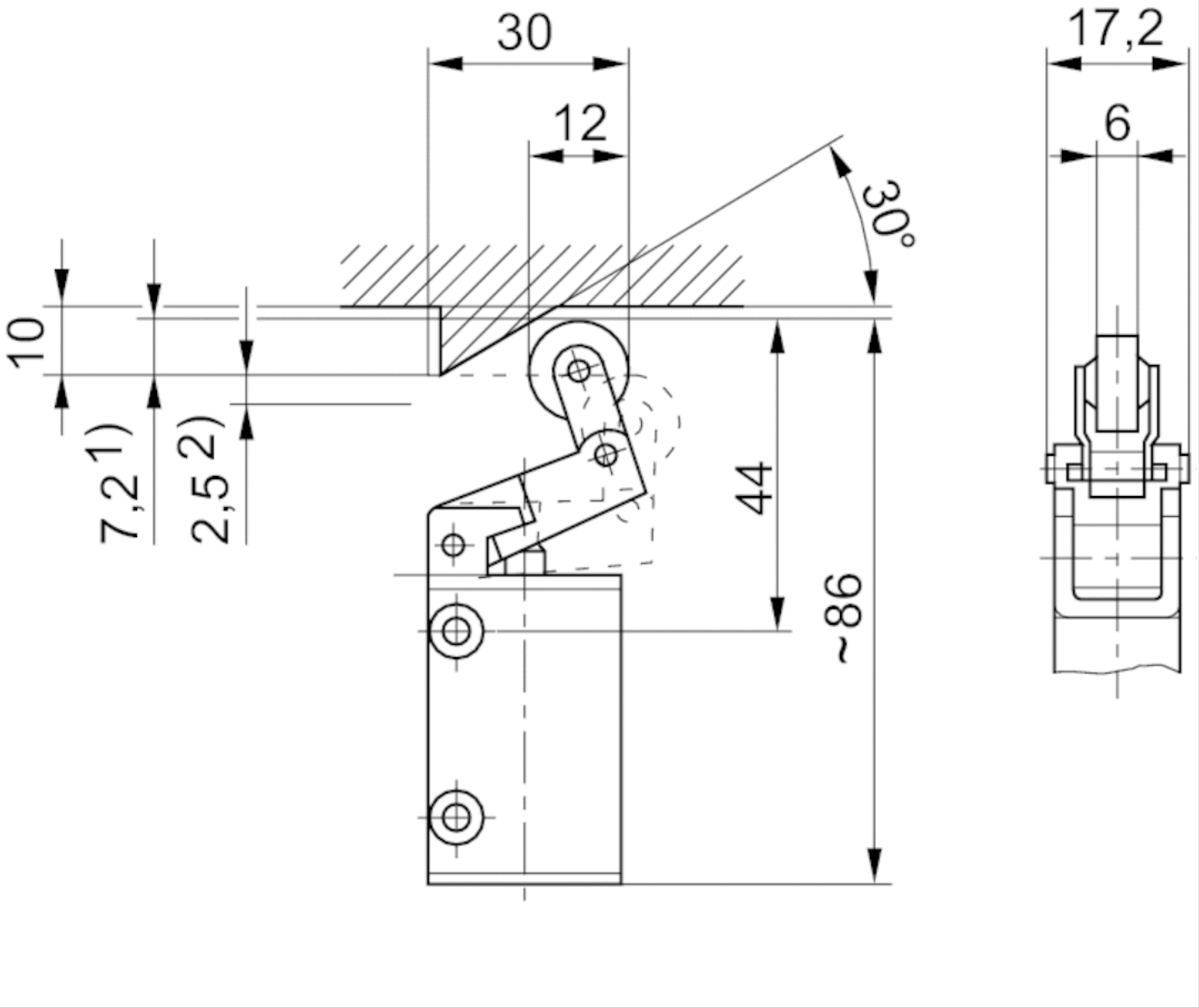

1) actuating stroke
2) overstroke

Dimensions, Fig. 4

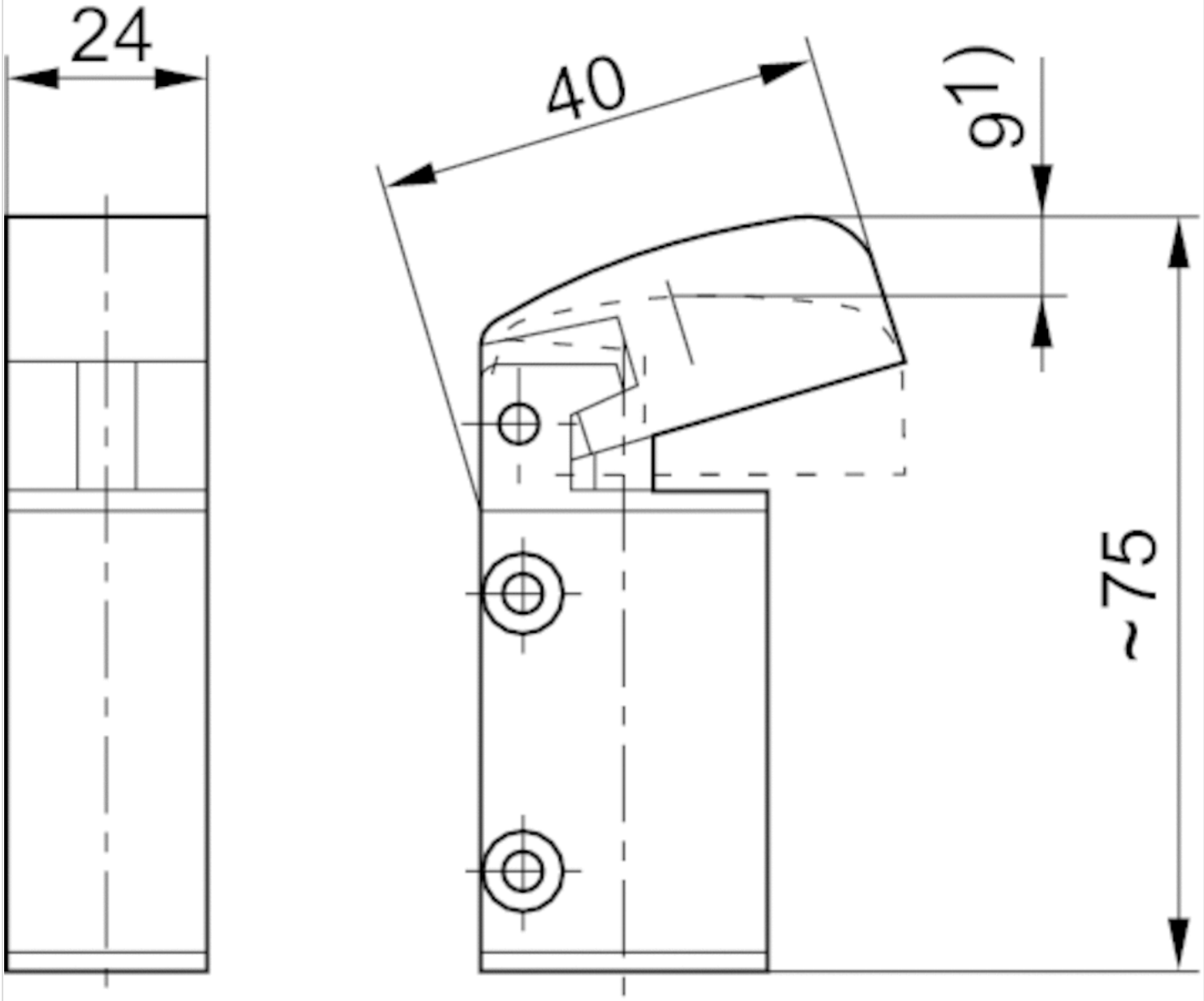

1) actuating stroke
connection via 2 through-holes in housing

Dimensions, Fig. 5

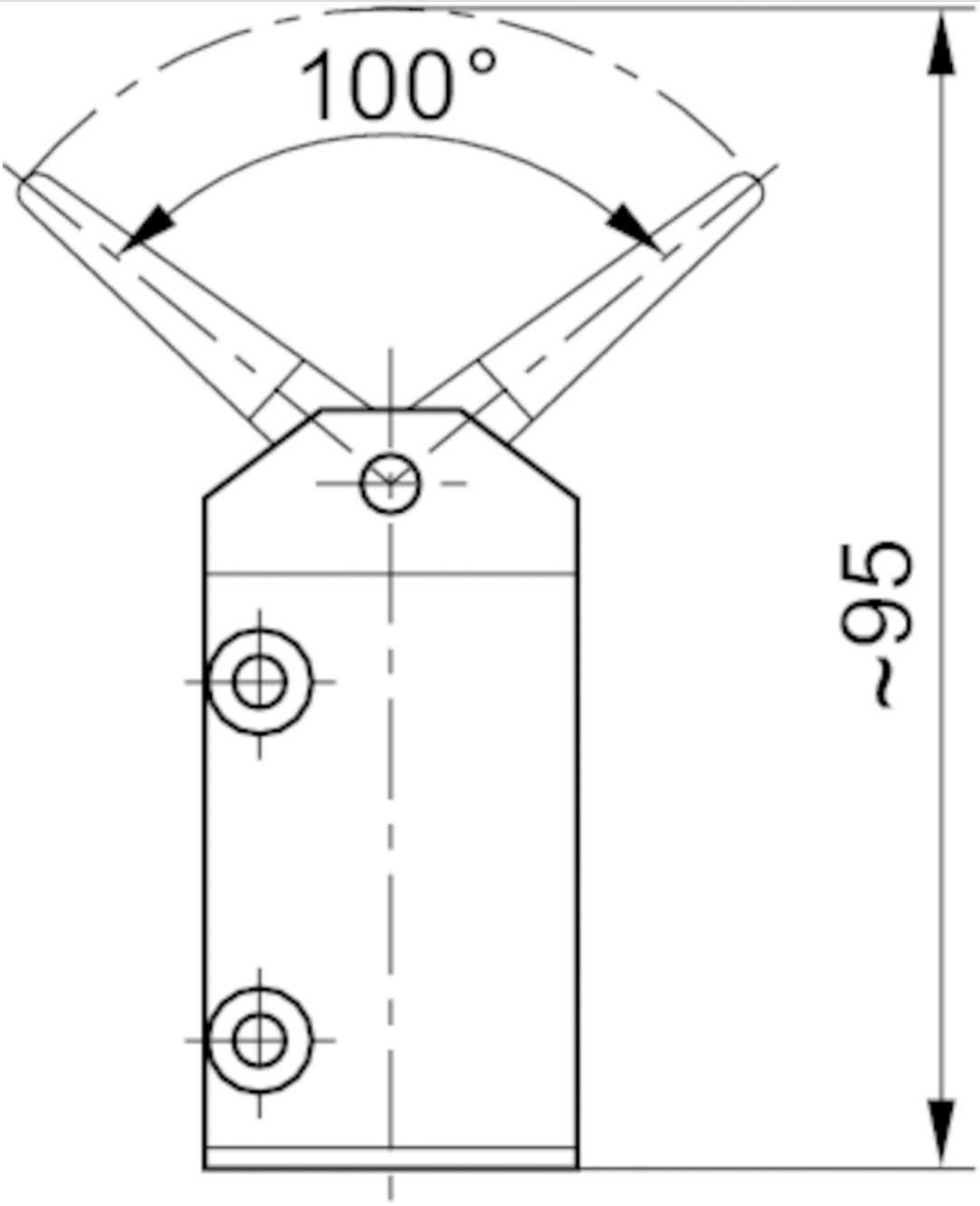

Dimensions, Fig. 6

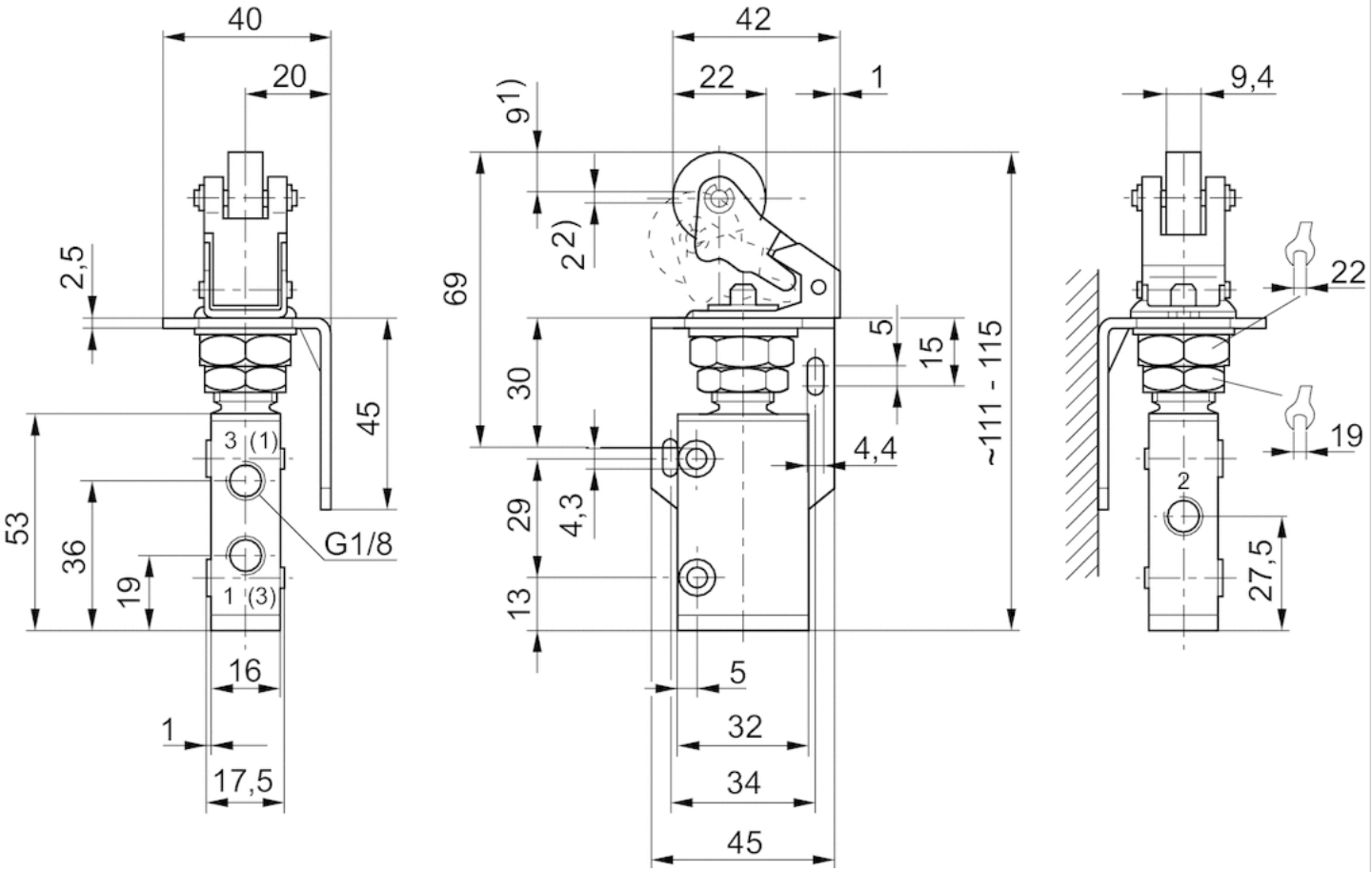

1) Actuating stroke 2) Overstroke
Can be adjusted by 90°, thereby providing 4 different angles of approach

Dimensions, Fig. 7

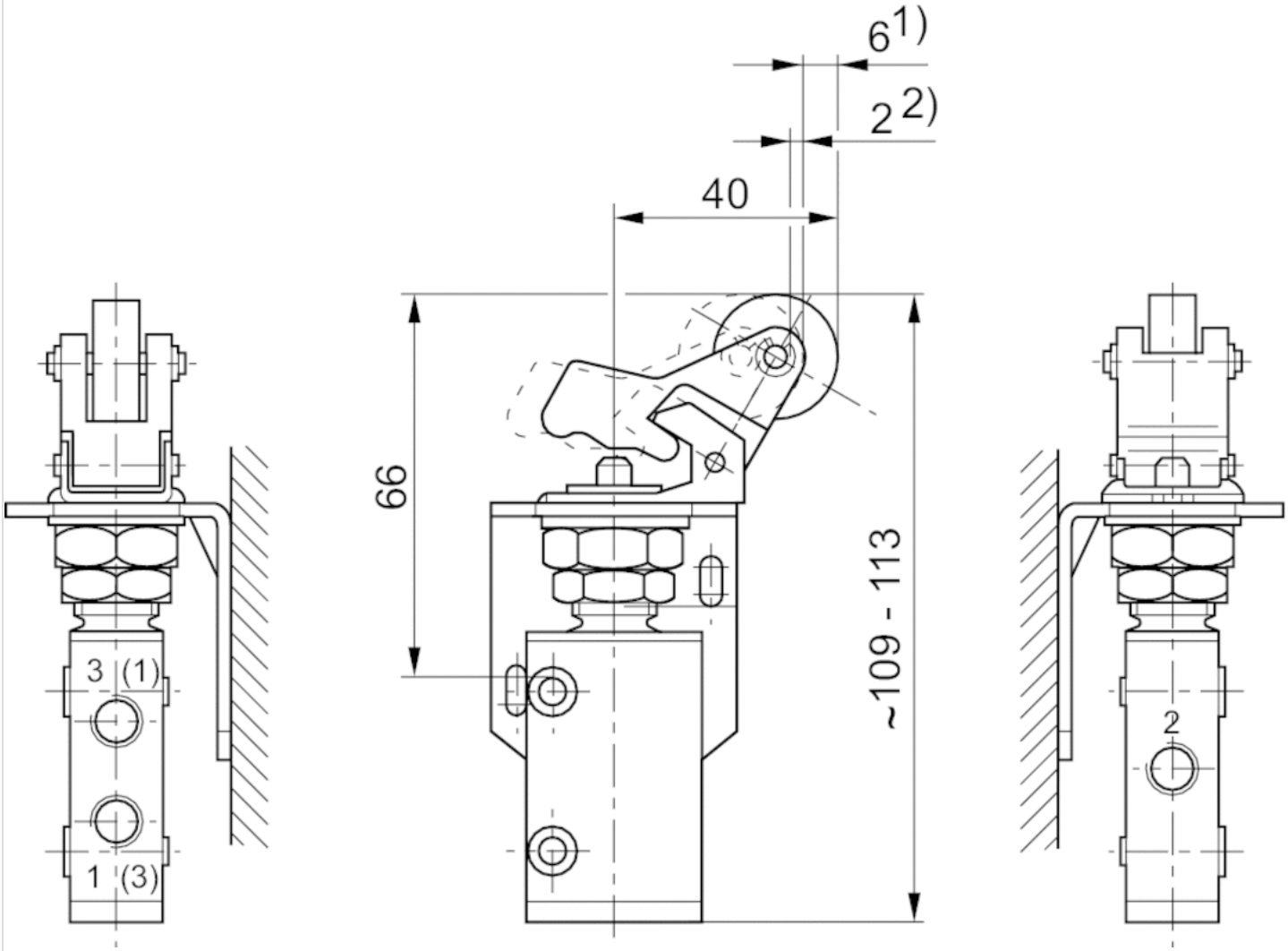

1) Actuating stroke 2) Overstroke
Can be adjusted by 90°, thereby providing 4 different angles of approach

angle of approach for 0820402016 and 0820402017

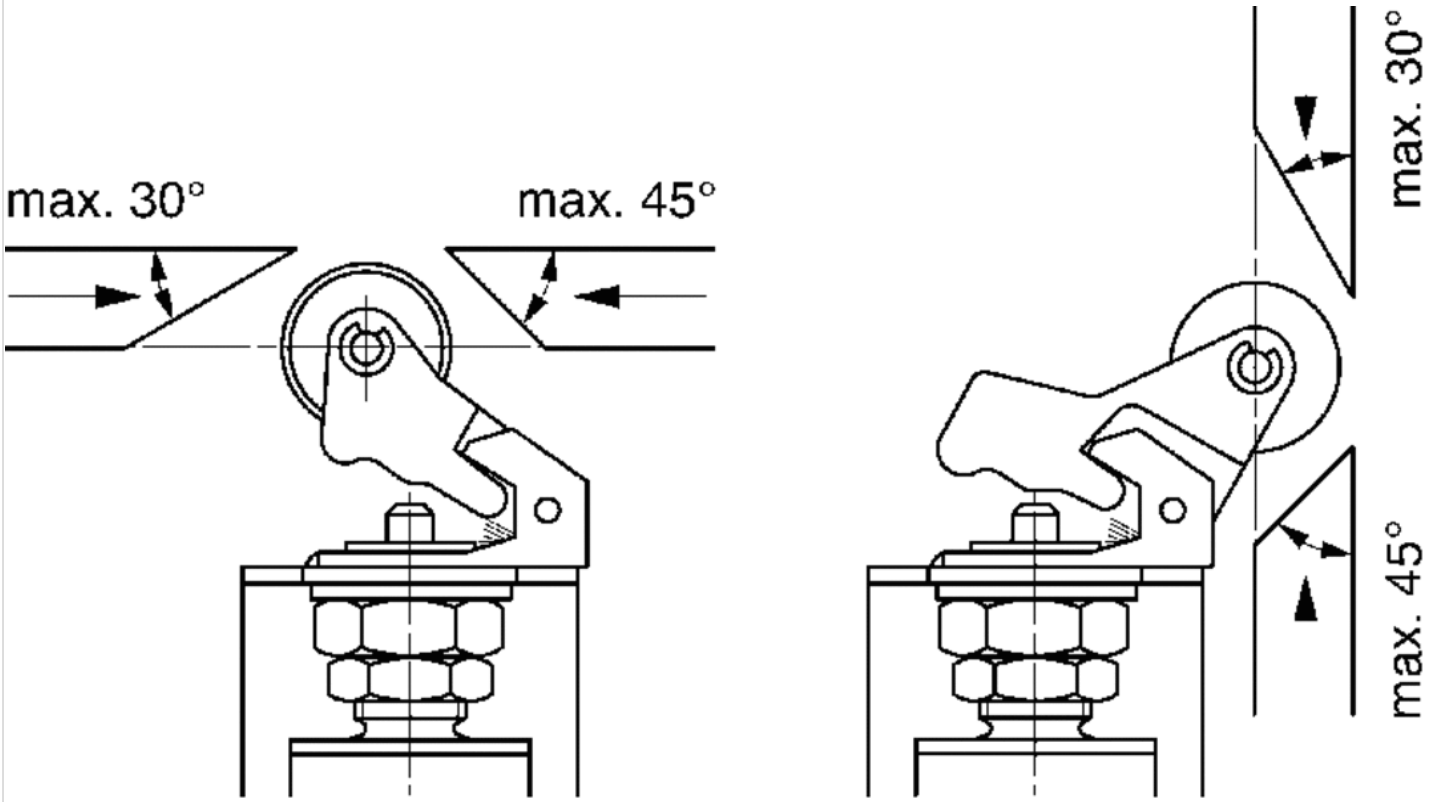

Dimensions, Fig. 8

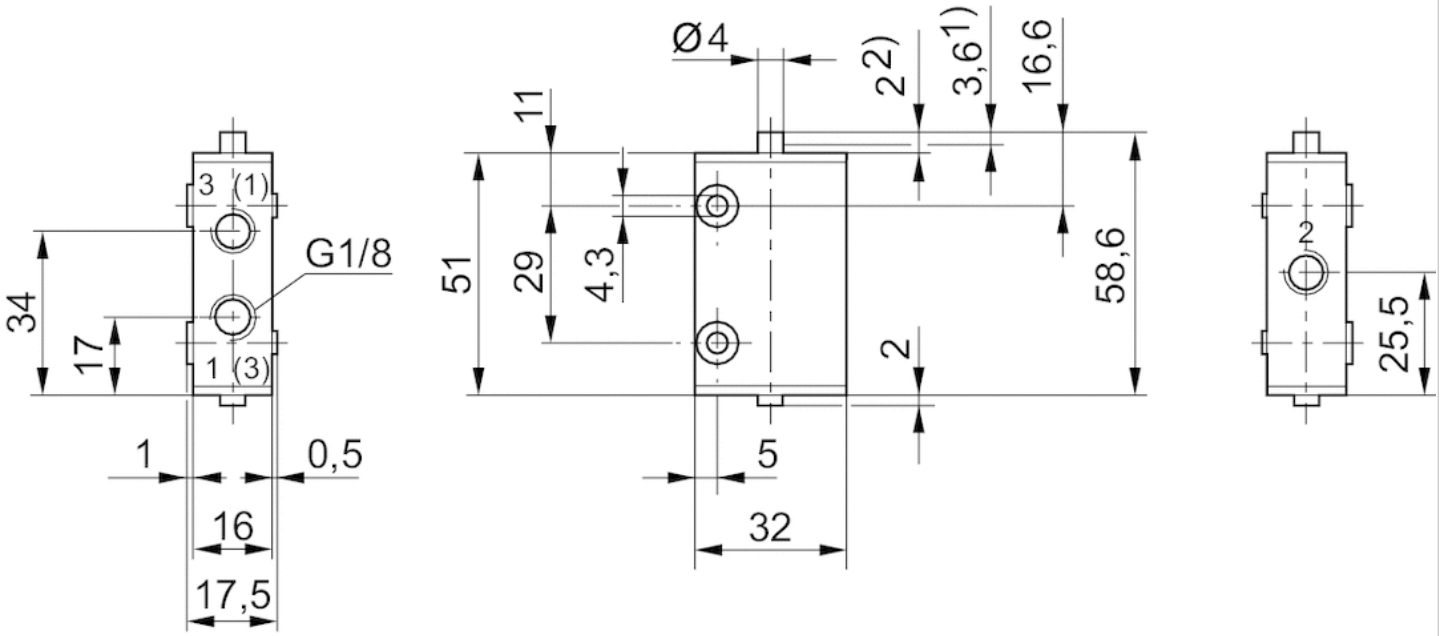

1) actuating stroke
2) overstroke