

Spring-rod actuator

Part no. **LS-XS**
Article no. **266133**

Catalog No. **LS-XS**

Delivery programme

Basic function			Operating heads
Part group reference			LS(M)-…
Product range			Spring-rod actuator
Description			Not to be used as a safety position switch
For use with			Basic devices LS(M)…
Snap-action contact			Only permissible with snap-action contact

Notes The operating head can be rotated at 90° intervals to adapt to the specified approach direction.

Approvals

Product Standards	IEC/EN 60947-5; UL 508; CSA-C22.2 No. 14; CE marking
UL File No.	E29184
UL Category Control No.	NKCR
CSA File No.	12528
CSA Class No.	3211-03
North America Certification	UL listed, CSA certified

Technical data ETIM 5.0

Sensors (EG000026) / Drive head for position switches/hinge switches (EC001483)

Electric engineering, automation, process control engineering / Binary sensor technology, safety-related sensor technology / Position switch / Drive head for position switches (ecl@ss8-27-27-06-04 [BAA083008])

Type of control element			Spring-rod

Dimensions

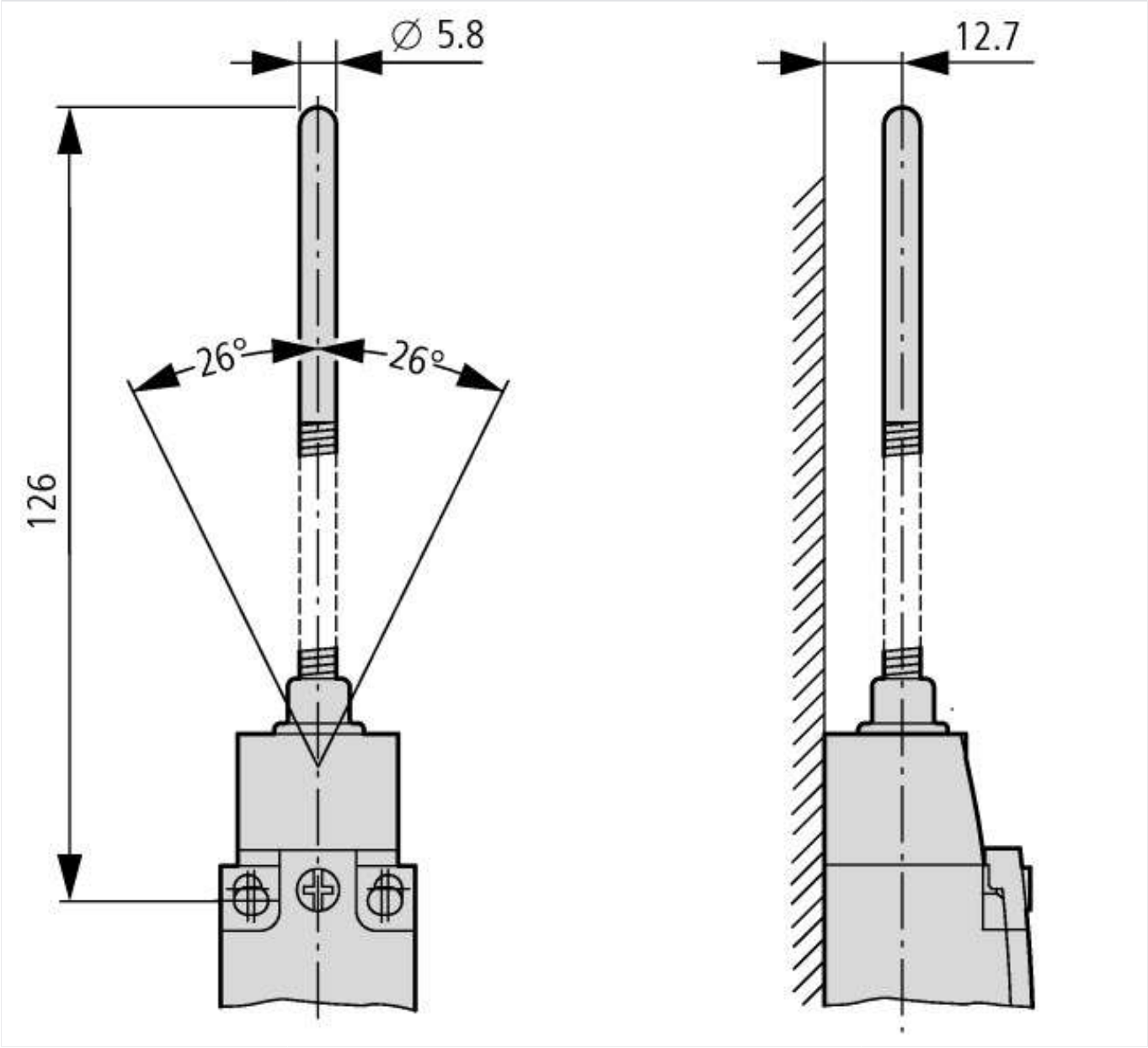

© 07/2014 by Eaton Industries GmbH