R2E220-AA40-B8

AC centrifugal fan

backward-curved, single-intake

ebm-papst Mulfingen GmbH & Co. KG
Bachmühle 2 · D-74673 Mulfingen
Phone +49 7938 81-0
Fax +49 7938 81-110
info1@de.ebmpapst.com
www.ebmpapst.com

Limited partnership · Headquarters Mulfingen
Amtsgericht (court of registration) Stuttgart · HRA 590344

General partner Elektrobau Mulfingen GmbH · Headquarters Mulfingen
Amtsgericht (court of registration) Stuttgart · HRB 590142

Nominal data

Type	**R2E220-AA40-B8**
Motor	**M2E068-BF**

Phase		1~	1~	1~
Nominal voltage	VAC	230	230	230
Frequency	Hz	50	60	60
Method of obtaining data		fa	fa	fa
Valid for approval/standard		CE	UL 2111	CE
Speed (rpm)	min^{-1}	2600	2600	2700
Power consumption	W	85	95	90
Current draw	A	0.38	0.40	0.40
Capacitor	µF	3	2	2
Capacitor voltage	VDB	400	400	400
Capacitor standard		S0 (CE)	UL	S0 (CE)
Min. back pressure	Pa	0	0	0
Min. back pressure	in. wg	0	0	0
Min. ambient temperature	°C	-25	-25	-25
Max. ambient temperature	°C	55	55	55
Starting current	A	0.54		0.52

ml = Max. load · me = Max. efficiency · fa = Free air · cs = Customer specification · ce = Customer equipment
Subject to change

AC centrifugal fan

backward-curved, single-intake

Technical description

Weight	1.5 kg
Fan size	220 mm
Rotor surface	Unpainted
Impeller material	PA6 plastic, glass-fiber reinforced
Number of blades	11
Direction of rotation	Clockwise, viewed toward rotor
Degree of protection	IP44; installation- and position-dependent
Insulation class	"F"
Moisture (F) / Environmental (H) protection class	H1
Max. permitted ambient temp. for motor (transport/storage)	+ 80 °C
Min. permitted ambient temp. for motor (transport/storage)	- 40 °C
Installation position	Any
Condensation drainage holes	None
Mode	S1
Motor bearing	Ball bearing
Touch current according to IEC 60990 (measuring circuit Fig. 4, TN system)	< 0.75 mA
Motor protection	Thermal overload protector (TOP) internally connected
With cable	Variable
Protection class	I (with customer connection of protective earth)
Conformity with standards	EN 60335-1; CE
Approval	CCC; UL 1004-3; CSA C22.2 No. 77; EAC

ebm-papst Mulfingen GmbH & Co. KG · Bachmühle 2 · D-74673 Mulfingen · Phone +49 (0) 7938 81-0 · Fax +49 (0) 7938 81-110 · info1@de.ebmpapst.com · www.ebmpapst.com

AC centrifugal fan

backward-curved, single-intake

Product drawing

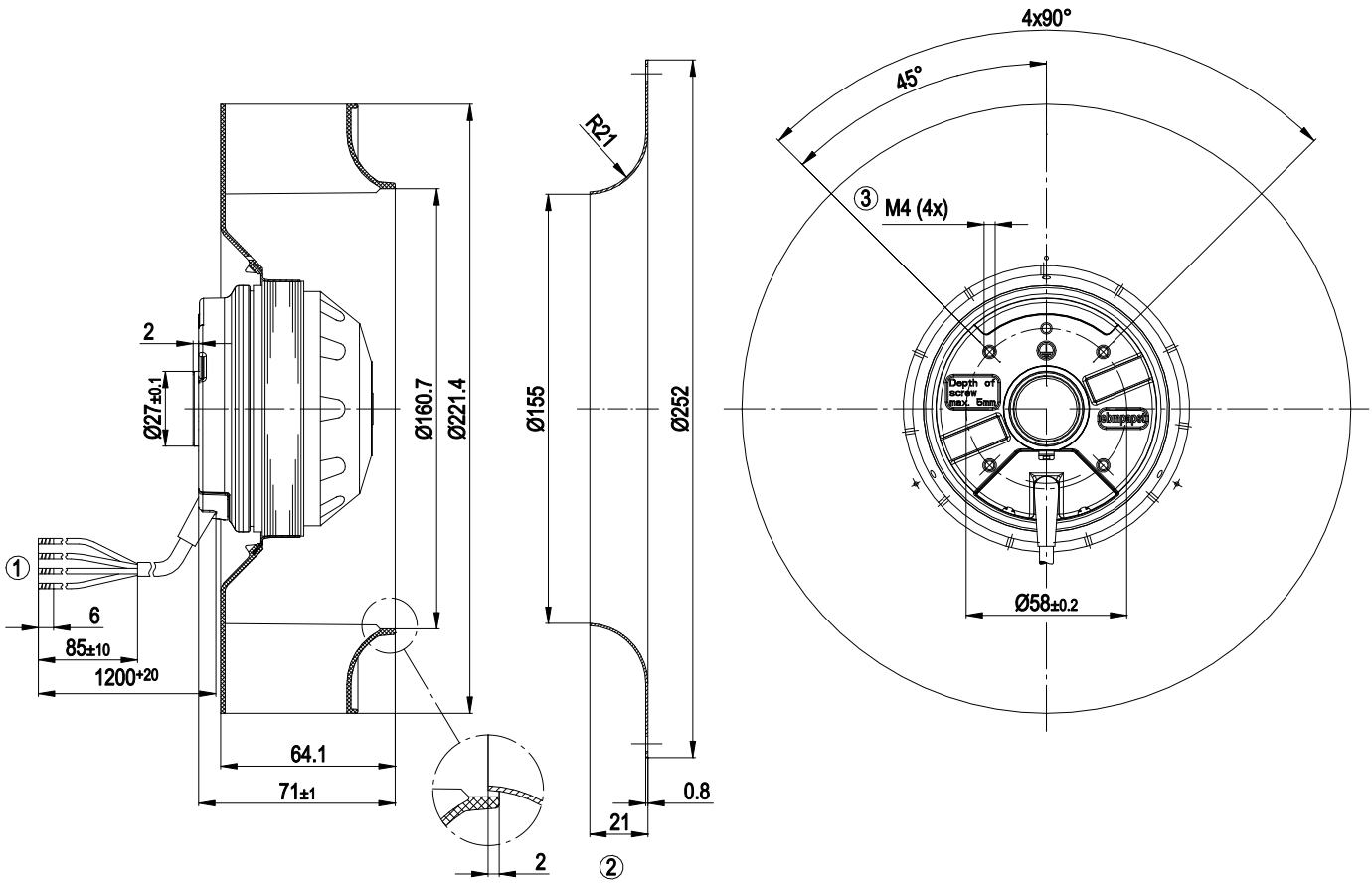

1	Cable PFA AWG20, 4x crimped splices
2	Accessory part: inlet ring 09609-2-4013, not included in scope of delivery
3	Max. clearance for screw 5 mm

Connection diagram

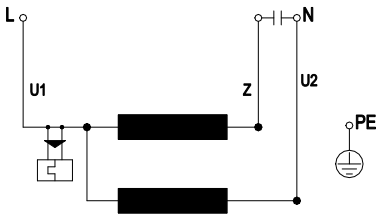

U1	blue	Z	brown	U2	black
PE	green/yellow				

ebm-papst Mulfingen GmbH & Co. KG · Bachmühle 2 · D-74673 Mulfingen · Phone +49 (0) 7938 81-0 · Fax +49 (0) 7938 81-110 · info1@de.ebmpapst.com · www.ebmpapst.com

AC centrifugal fan

backward-curved, single-intake

Curves: Air performance 50 Hz

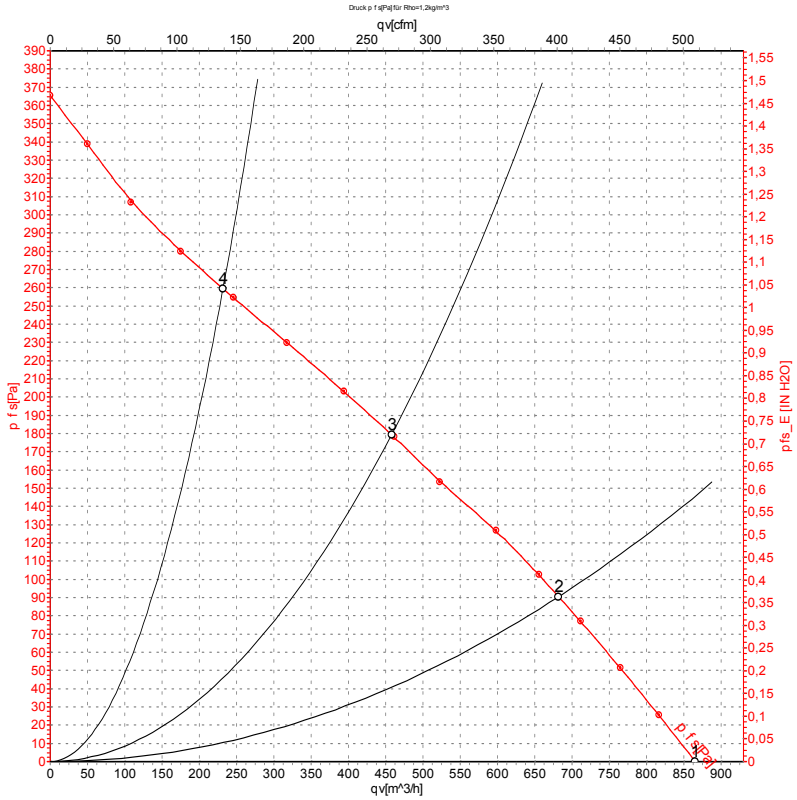

Measurement: LU-106763-1

Air performance measured according to ISO 5801 installation category A. For detailed information on the measurement setup, contact ebm-papst. Intake sound level: Sound power level according to ISO 13347 / sound pressure level measured at 1 m distance from fan axis. The values given are valid under the specified measuring conditions and may vary due to conditions of installation. For deviations from the standard configuration, the parameters have to be checked on the installed unit.

Measured values

	U	f	n	P_e	I	q_V	p_{fs}	q_V	p_{fs}
	V	Hz	min^{-1}	W	A	m^3/h	Pa	cfm	in. wg
1	230	50	2405	85	0.38	865	0	510	0.00
2	230	50	2260	91	0.39	680	90	400	0.36
3	230	50	2155	94	0.41	460	180	270	0.72
4	230	50	2245	91	0.40	230	260	135	1.04

U = Power supply · f = Frequency · n = Speed (rpm) · P_e = Power consumption · I = Current draw · q_V = Air flow · p_{fs} = Pressure increase

ebm-papst Mulfingen GmbH & Co. KG · Bachmühle 2 · D-74673 Mulfingen · Phone +49 (0) 7938 81-0 · Fax +49 (0) 7938 81-110 · info1@de.ebmpapst.com · www.ebmpapst.com

AC centrifugal fan

backward-curved, single-intake

Curves: Air performance 60 Hz

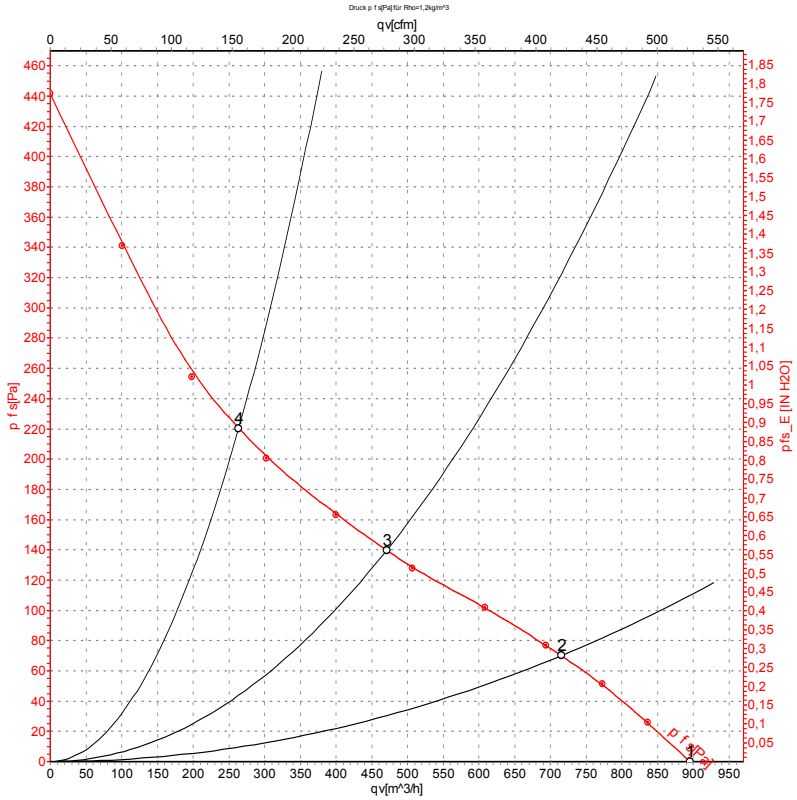

Measurement: LU-106764-1

Air performance measured according to ISO 5801 installation category A. For detailed information on the measurement setup, contact ebm-papst. Intake sound level: Sound power level according to ISO 13347 / sound pressure level measured at 1 m distance from fan axis. The values given are valid under the specified measuring conditions and may vary due to conditions of installation. For deviations from the standard configuration, the parameters have to be checked on the installed unit.

Measured values

	U	f	n	P_e	I	q_V	p_{fs}	q_V	p_{fs}
	V	Hz	min^{-1}	W	A	m^3/h	Pa	cfm	in. wg
1	230	60	2490	84	0.37	895	0	525	0.00
2	230	60	2265	90	0.39	715	70	420	0.28
3	230	60	2020	94	0.41	470	140	275	0.56
4	230	60	2100	93	0.40	265	220	155	0.88

U = Power supply · f = Frequency · n = Speed (rpm) · P_e = Power consumption · I = Current draw · q_V = Air flow · p_{fs} = Pressure increase

ebm-papst Mulfingen GmbH & Co. KG · Bachmühle 2 · D-74673 Mulfingen · Phone +49 (0) 7938 81-0 · Fax +49 (0) 7938 81-110 · info1@de.ebmpapst.com · www.ebmpapst.com