BF50T4A048

FOUR-POLE CONTACTOR, IEC OPERATING CURRENT ITH (AC1) = 90A, AC COIL 50/60HZ, 48VAC



Product designation			Power contactor
Product type designation			BF50
Contact characteristics			
Number of poles		Nr.	4
Rated insulation voltage Ui IEC/EN		V	1000
Rated impulse withstand voltage Uimp		kV	8
Operational frequency			
	min	Hz	25
	max	Hz	400
IEC Conventional free air thermal current Ith		A	90
Operational current Ie			
	AC-1 (≤40°C)	A	90
	AC-1 (≤55°C)	A	75
	AC-1 (≤70°C)	A	65
	AC-3 (≤440V ≤55°C)	A	50
	AC-4 (400V)	A	28
Rated operational power AC-1 (T≤40°C)			
	230V	kW	34
	400V	kW	59
	500V	kW	74
	690V	kW	102
IEC max current Ie in DC1 with L/R ≤ 1ms with 1 poles in series			
	≤24V	A	45
	48V	A	40
	75V	A	40
	110V	A	8
	220V	A	–
IEC max current Ie in DC1 with L/R ≤ 1ms with 2 poles in series			
	≤24V	A	60
	48V	A	60
	75V	A	60
	110V	A	50
	220V	A	7
IEC max current Ie in DC1 with L/R ≤ 1ms with 3 poles in series			
	≤24V	A	60
	48V	A	60
	75V	A	60
	110V	A	55
	220V	A	75
IEC max current Ie in DC1 with L/R ≤ 1ms with 4 poles in series			
	≤24V	A	60
	48V	A	60
	75V	A	60
	110V	A	60
	220V	A	90

The characteristics described in this document are subject to updates or modifications at any time. The descriptions, technical and functional information, illustrations and instructions in this brochure are purely illustrative, and are consequently not contractually binding

IEC max current Ie in DC3-DC5 with L/R ≤ 15ms with 1 poles in series			
	≤24V	A	30
	48V	A	25
	75V	A	22
	110V	A	3
	220V	A	–
IEC max current Ie in DC3-DC5 with L/R ≤ 15ms with 2 poles in series			
	≤24V	A	35
	48V	A	35
	75V	A	30
	110V	A	25
	220V	A	5
IEC max current Ie in DC3-DC5 with L/R ≤ 15ms with 3 poles in series			
	≤24V	A	50
	48V	A	50
	75V	A	45
	110V	A	30
	220V	A	40
IEC max current Ie in DC3-DC5 with L/R ≤ 15ms with 4 poles in series			
	≤24V	A	55
	48V	A	55
	75V	A	55
	110V	A	45
	220V	A	50
Short-time allowable current for 10s (IEC/EN60947-1)		A	400
Protection fuse			
	gG (IEC)	A	100
	aM (IEC)	A	50
Making capacity (RMS value)		A	500
Breaking capacity at voltage			
	440V	A	400
	500V	A	352
	690V	A	312
Resistance per pole (average value)		mΩ	0.8
Power dissipation per pole (average value)			
	Ith	W	6.5
	AC3	W	2
Tightening torque for terminals			
	min	Nm	4
	max	Nm	5
	min	lbin	2.95
	max	lbin	3.69
Tightening torque for coil terminal			
	min	Nm	0.8
	max	Nm	1
	min	lbin	0.8
	max	lbin	0.74
Max number of wires simultaneously connectable		Nr.	2
Conductor section			
AWG/Kcmil			
	max		2
Flexible w/o lug conductor section			
	min	mm²	1.5

The characteristics described in this document are subject to updates or modifications at any time. The descriptions, technical and functional information, illustrations and instructions in this brochure are purely illustrative, and are consequently not contractually binding

		max	mm²	35
	Flexible c/w lug conductor section			
		min	mm²	1.5
		max	mm²	35
Power terminal protection according to IEC/EN 60529				IP20 front
Mechanical features				
Operating position				
		normal		Vertical plan
		allowable		±30°
Fixing				Screw / DIN rail 35mm
Weight			g	1240
Conductor section				
	AWG/kcmil conductor section			
		max		2
Operations				
Mechanical life			cycles	15000000
Electrical life			cycles	1400000
Safety related data				
Performance level B10d according to EN/ISO 13489-1				
		rated load	cycles	1400000
		mechanical load	cycles	15000000
Mirror contats according to IEC/EN 609474-4-1				yes
EMC compatibility				yes
AC coil operating				
Rated AC voltage at 50/60Hz			V	48
AC operating voltage				
	of 50/60Hz coil powered at 50Hz			
	pick-up			
		min	%Us	80
		max	%Us	110
	drop-out			
		min	%Us	20
		max	%Us	55
	of 50/60Hz coil powered at 60Hz			
	pick-up			
		min	%Us	85
		max	%Us	110
	drop-out			
		min	%Us	40
		max	%Us	55
AC average coil consumption at 20°C				
	of 50/60Hz coil powered at 50Hz			
		in-rush	VA	210
		holding	VA	15
	of 50/60Hz coil powered at 60Hz			
		in-rush	VA	195
		holding	VA	13
	of 60Hz coil powered at 60Hz			
		in-rush	VA	210
		holding	VA	15
Dissipation at holding ≤20°C 50Hz			W	5
Max cycles frequency				
Mechanical operation			cycles/h	3600

The characteristics described in this document are subject to updates or modifications at any time. The descriptions, technical and functional information, illustrations and instructions in this brochure are purely illustrative, and are consequently not contractually binding

Operating times

Average time for Us control				
	in AC			
		Closing NO		
			min	ms 12
			max	ms 28
		Opening NO		
			min	ms 8
			max	ms 22
	in DC			
		Closing NO		
			min	ms 40
			max	ms 85
		Opening NO		
			min	ms 20
			max	ms 55

UL technical data

Full-load current (FLA) for three-phase AC motor				
			at 480V	A 52
			at 600V	A 41
Yielded mechanical performance				
	for single-phase AC motor			
			110/120V	HP 5
			230V	HP 10
	for three-phase AC motor			
			200/208V	HP 15
			220/230V	HP 20
			460/480V	HP 40
			575/600V	HP 40
General USE				
	Contactor			
			AC current	A 90
Short-circuit protection fuse, 600V				
	High fault			
			Short circuit current	kA 100
			Fuse rating	A 150
			Fuse class	J
	Standard fault			
			Short circuit current	kA 5
			Fuse rating	A 150
			Fuse class	RK5

Ambient conditions

Temperature				
	Operating temperature			
			min	°C -50
			max	°C 70
	Storage temperature			
			min	°C -60
			max	°C 80
Max altitude				m 3000

Resistance & Protection

Pollution degree	3

Dimensions

The characteristics described in this document are subject to updates or modifications at any time. The descriptions, technical and functional information, illustrations and instructions in this brochure are purely illustrative, and are consequently not contractually binding

BF50T4A048

FOUR-POLE CONTACTOR, IEC OPERATING CURRENT ITH (AC1) = 90A, AC COIL 50/60HZ, 48VAC

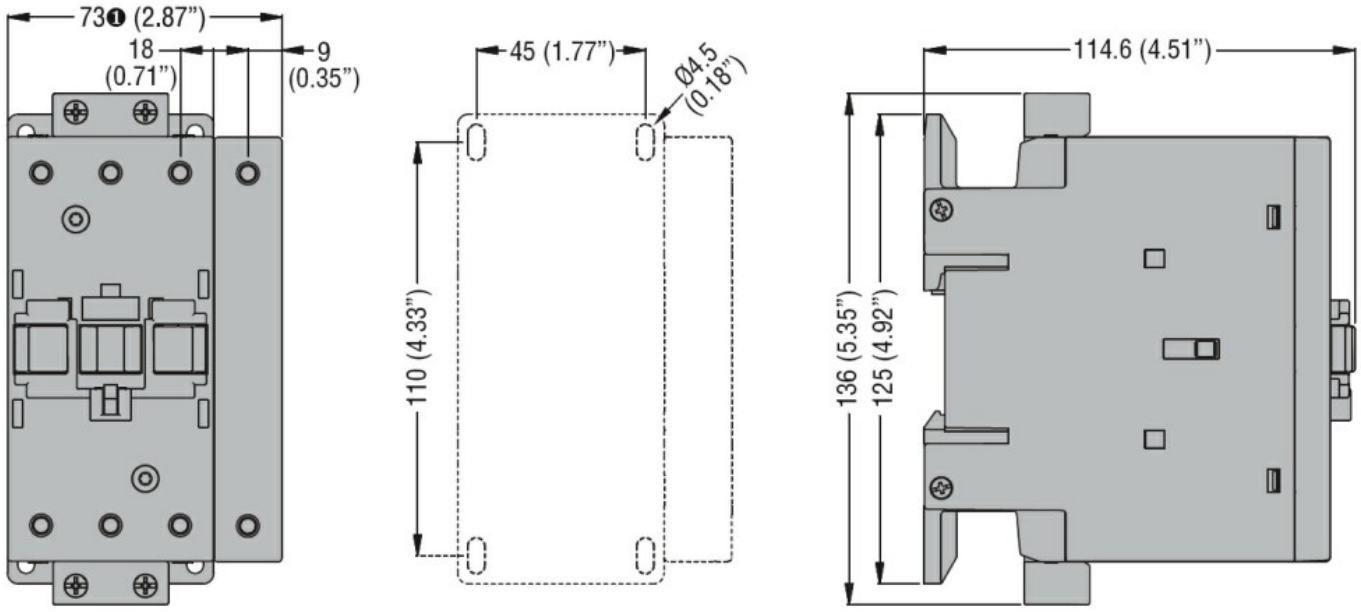

❶ BF80T2 82mm/3.23"

Wiring diagrams

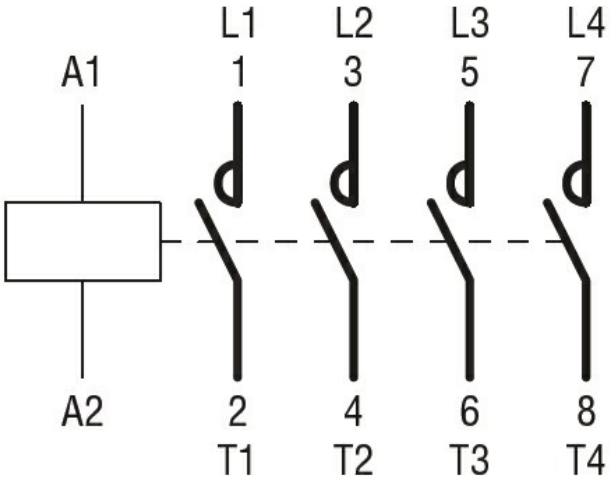

Certifications and compliance

Compliance

	CSA C22.2 n° 60947-1
	CSA C22.2 n° 60947-4-1
	IEC/EN/BS 60947-1
	IEC/EN/BS 60947-4-1
	UL 60947-1
	UL 60947-4-1

Certificates

	CCC
	cULus

ETIM classification

ETIM 8.0	EC000066 - Power contactor, AC switching

The characteristics described in this document are subject to updates or modifications at any time. The descriptions, technical and functional information, illustrations and instructions in this brochure are purely illustrative, and are consequently not contractually binding