Data sheet

Thermistor motor protection relays CM-MSS.32 and CM-MSS.33

The thermistor motor protection relays CM-MSS.32 and CM-MSS.33 monitor the winding temperature of motors and protect them from overheating, overload and insufficient cooling.

The devices are available with two different terminal versions. You can choose between the proven screw connection technology (double-chamber cage connection terminals) and the completely tool-free Easy Connect Technology (push-in terminals).



Characteristics

- 1 measuring circuit
- Test / Reset button
- Auto, manual or remote reset configurable
- Short-circuit monitoring of the sensor circuit
- Dynamic interrupted wire detection
- LEDs to distinguish between different failure causes
- Overvoltage protected supply and measuring inputs
- Increased interference immunity acc. to EN 62061 with evaluation criterion "Fail-Safe"
- According to the latest version of the product standard IEC 60947-8
- Screw connection technology or Easy Connect Technology available
- Housing material for highest fire protection classification UL 94 V-0
- Tool-free mounting on DIN rail as well as demounting
- 22.5 mm (0.89 in) width

Approvals

UL 508, CAN/CSA C22.2 No.14
GL
EAC
CB scheme
CCC
ATEX

Marks

CE
RCM

Order data

Type	Rated control supply voltage	Output contacts	Connection technology	Order code
CM-MSS.32P	24 V AC/DC *	2 c/o (SPDT) contacts	Push-in terminals	1SVR740712R0200
CM-MSS.32S			Screw terminals	1SVR730712R0200
CM-MSS.33P	110-130 V AC, 220-240 V AC		Push-in terminals	1SVR740712R2200
CM-MSS.33S			Screw terminals	1SVR730712R2200

* Supply and measuring circuits not electrically isolated

Connection technology

Maintenance free Easy Connect Technology with push-in terminals

Type designation CM-xxS.yyP

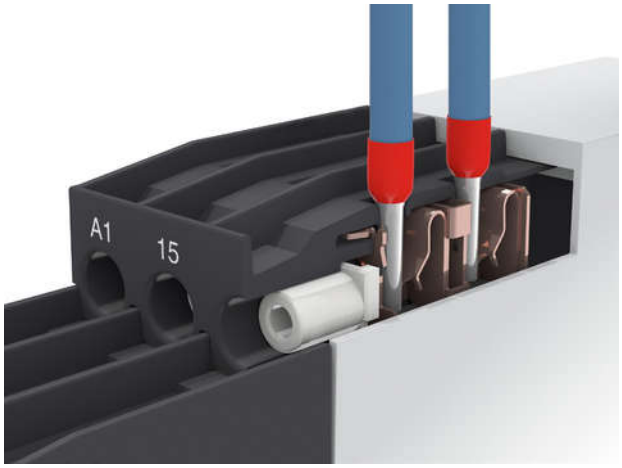

2CDC 253 026 F0011

Push-in terminals

- Tool-free connection of rigid and flexible wires with wire end ferrule according to DIN 46228-1-A, DIN 46228-4-E
  Wire size: 2 x 0.5-1.5 mm², (2 x 20 - 16 AWG)
- Easy connection of flexible wires without wire end ferrule by opening the terminals
- No retightening necessary
- One operation lever for opening both connection terminals
- For triggering the lever and disconnecting of wires you can use the same tool (Screwdriver according to DIN ISO 2380-1 Form A 0.8 x 4 mm (0.0315 x 0.157 in), DIN ISO 8764-1 PZ1 ø 4.5 mm (0.177 in))
- Constant spring force on terminal point independent of the applied wire type, wire size or ambient conditions (e. g. vibrations or temperature changes)
- Opening for testing the electrical contacting
- Gas-tight

Approved screw connection technology with double-chamber cage connection terminals

Type designation CM-xxS.yyS

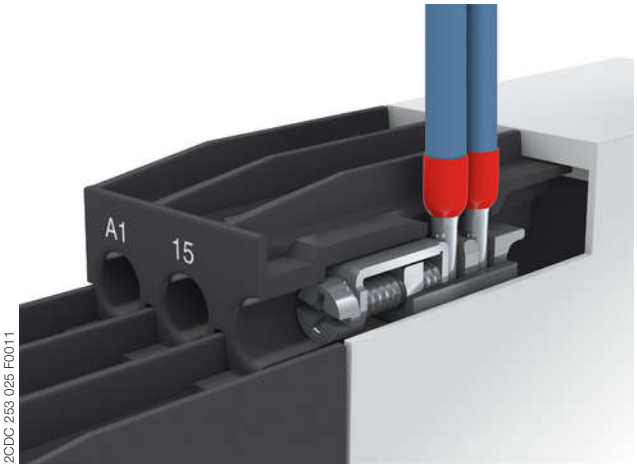

2CDC 253 025 F0011

Double-chamber cage connection terminals

- Terminal spaces for different wire sizes:
  fine-strand with/without wire end ferrule:
  1 x 0.5-2.5 mm² (2 x 20 - 14 AWG),
  2 x 0.5-1.5 mm² (2 x 20 - 16 AWG)
  rigid:
  1 x 0.5-4 mm² (1 x 20 - 12 AWG),
  2 x 0.5-2.5 mm² (2 x 20 - 14 AWG)
- One screw for opening and closing of both cages
- Pozidrive screws for pan- or crosshead screwdrivers according to DIN ISO 2380-1 Form A 0.8 x 4 mm (0.0315 x 0.157 in), DIN ISO 8764-1 PZ1 ø 4.5 mm (0.177 in)

Both the Easy Connect Technology with push-in terminals and screw connection technology with double-chamber cage connection terminals have the same connection geometry as well as terminal position.

Functions

Operating controls

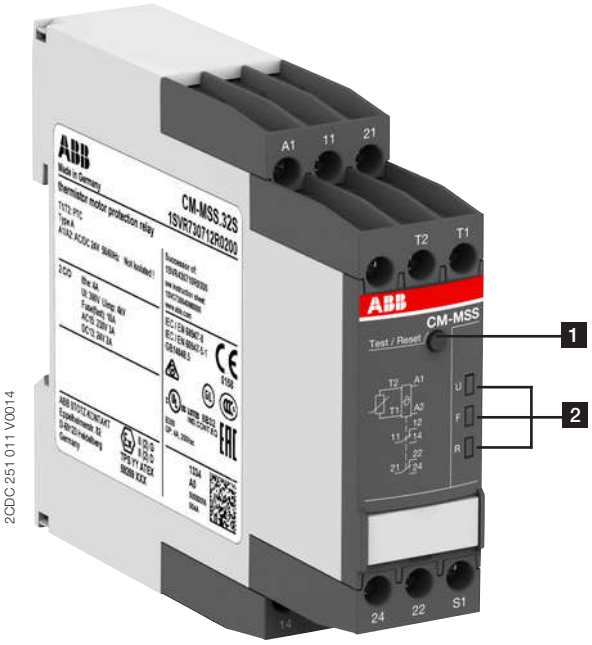

1 Test / Reset button

Reset - only possible if measured value < switch-on resistance

2 Indication of operational states with LEDs

U: green LED - Status indication of control supply voltage

Control supply voltage applied

F: red LED - Fault message

R: yellow LED - Status indication of the output relay

Application / Monitoring function

The thermistor motor protection relay CM-MSS monitors the winding temperature and thus protects the motor from overheating, overload and insufficient cooling in accordance to the product standard IEC 60947-8, control units for built-in thermal protection (PTC) for rotating electrical machines.

Operating mode

The thermistor motor protection relays CM-MSS.32 and CM-MSS.33 are used to monitor the temperature of motors or generators equipped with PTC resistor sensors type A. The sensors are built-in into the motor windings, measuring the motor heating. In case of an increase of the temperature in the motor, the resistance of the PTC sensors will increase as well. If the motor heats-up excessively (>2.83 kΩ) the output relays de-energize and the corresponding LED displays the overtemperature. A short circuit and an interrupted wire within the sensor circuit can also be detected. A reset is only possible after cooling down of the motor (<1.1 kΩ) or after a wire interruption or a short circuit within the sensor circuit has been removed. A reset after tripping can be done manually with the Test / Reset button, externally with a push button between S1 and T2, or automatically by jumpering S1 and T2.

By pressing the front-face combined Test / Reset button a system test routine is executed.

Short-circuit detection

If a short circuit is detected between the two lines of a sensor circuit, the output relays de-energize and the LEDs will display the specific error code.

Dynamic interrupted wire detection

During the operation the device is permanently monitoring the measuring circuit. If the resistance in the measuring circuit rises, the device distinguishes if there is an overtemperature or an interrupted wire. Then the output relays de-energize.

Test function

The test function is only possible when there is no fault. By pressing the front-face combined Test / Reset button or by jumpering S1-T2 a system test routine is executed. If S1-T2 are jumpered for the automatic reset, the test function can only be executed by pressing the Test / Reset button.

After starting the test routine the output relays de-energize. They remain de-energized until control input S1-T2 is closed or a reset is executed.

Reset

After rectification of a fault, the device has to be reset. This reset can be made manually by the Test / Reset button, automatically by jumpering S1-T2 or externally by a remote reset between S1-T2.

Electrical connection

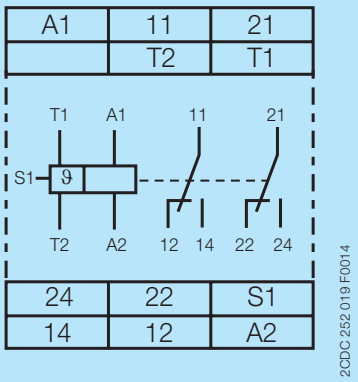

A1 – A2	Control supply voltage 24 V AC/DC
11 – 12/14	1st c/o (SPDT) contact
21 – 22/24	2nd c/o (SPDT) contact
S1 – T2 (jumpered)	Automatic reset
T1 – T2	Measuring circuit

Connection diagram CM-MSS.32

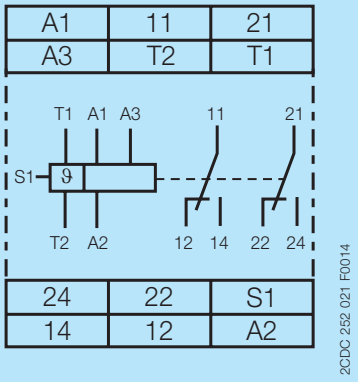

A1 – A2	Control supply voltage 220-240 V AC
A2 – A3	Control supply voltage 110-130 V AC
11 – 12/14	1st c/o (SPDT) contact
21 – 22/24	2nd c/o (SPDT) contact
S1 – T2 (jumpered)	Automatic reset
T1 – T2	Measuring circuit

Connection diagram CM-MSS.33

Indication of operational states

LEDs, status information and fault messages

Operational State	U: LED green	F: LED red	R: LED yellow
Absence of control supply voltage	OFF	OFF	OFF
No fault	⎍	OFF	⎍
Short circuit	⎍	⎍⎍	OFF
Interrupted wire	⎍	⎍⎍	OFF
Overtemperature	⎍	⎍	OFF
Test function	⎍⎍	OFF	OFF
Fault rectified but not confirmed	⎍	[1]	⎍⎍
Change of configuration not confirmed	⎍	OFF	⎍⎍
Control supply voltage not within the tolerance range	⎍⎍	⎍	OFF
Internal fault [2]	OFF	⎍⎍	⎍⎍
Internal fault [2]	⎍⎍	⎍⎍	⎍⎍

[1] Depending on the fault
[2] Restart the device. If after restart the same fault is indicated, replace the device

Function diagrams

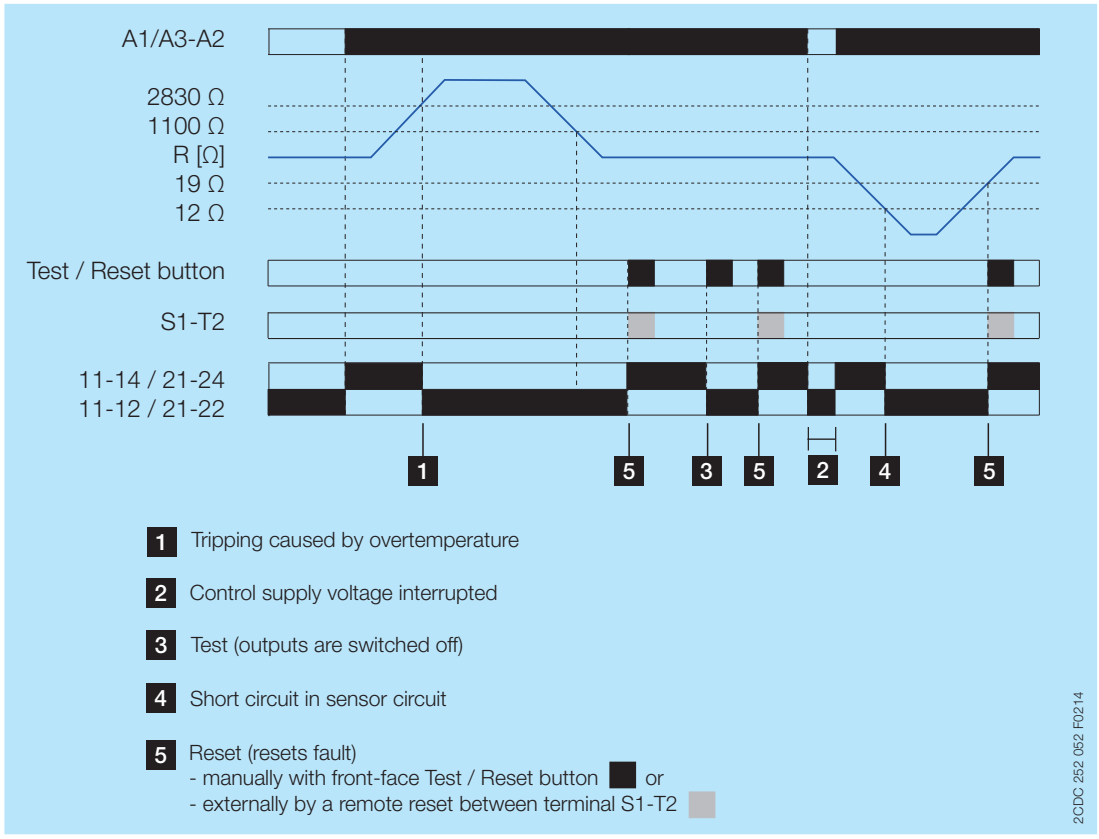

CM-MSS.32, CM-MSS.33 Manual reset

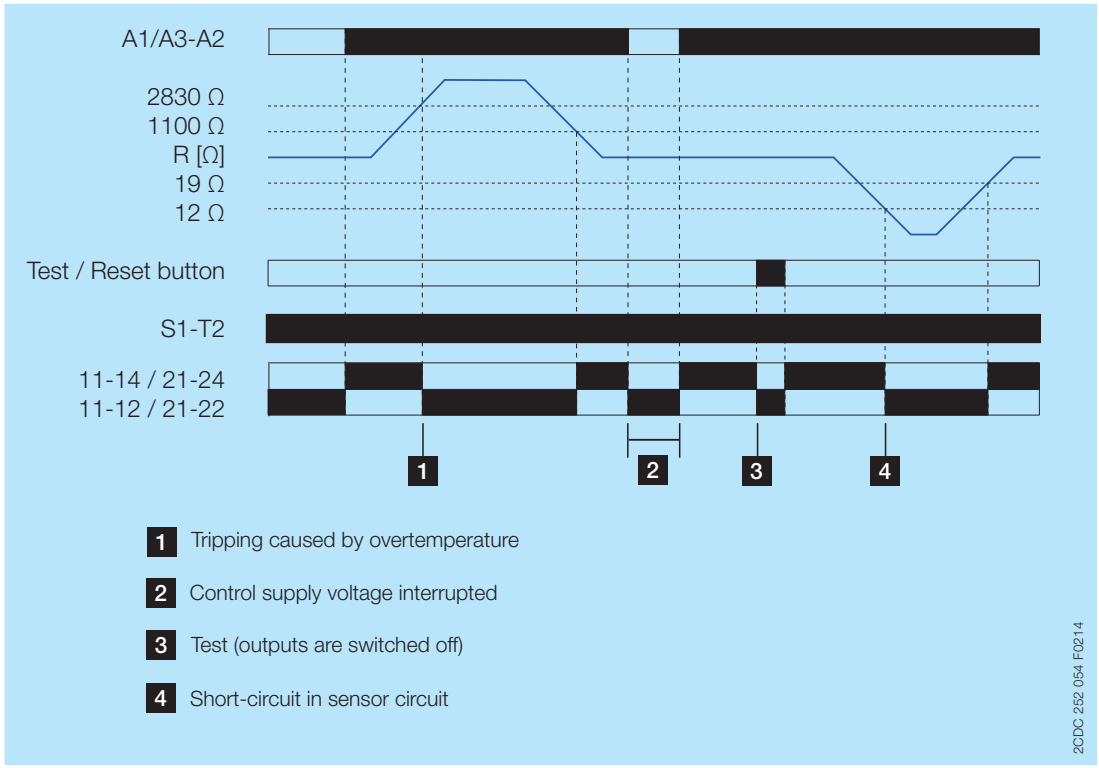

CM-MSS.32, CM-MSS.33 Auto reset

Example of application

Circuit diagrams

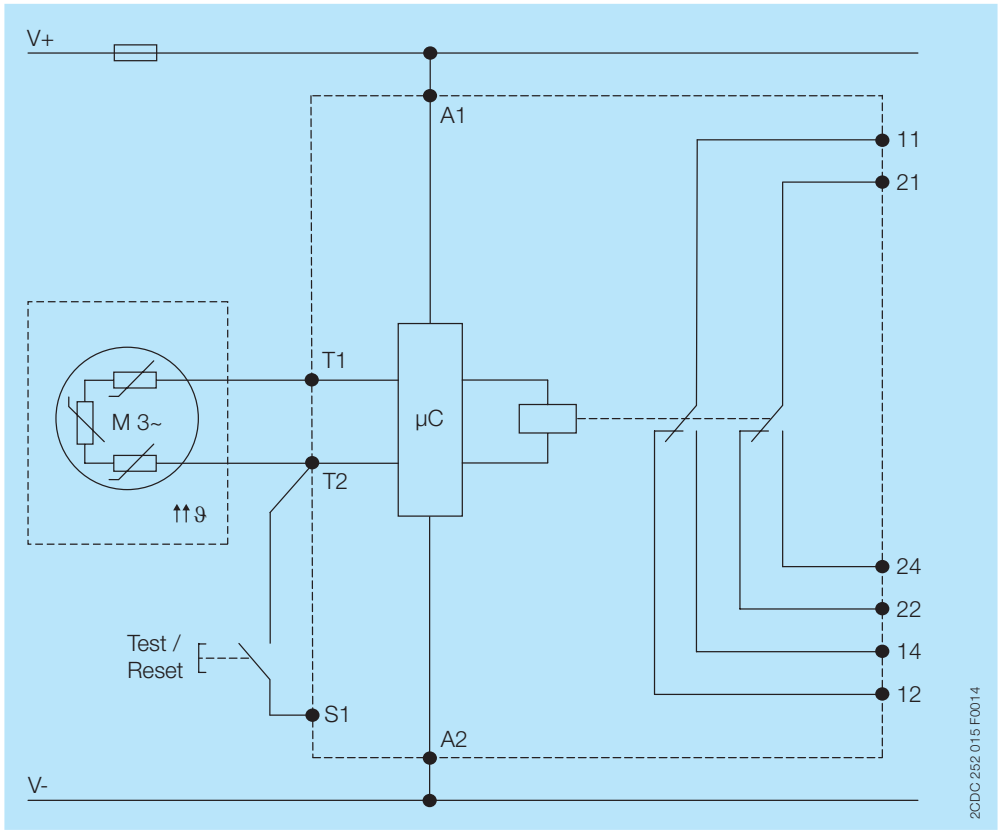

CM-MSS.32

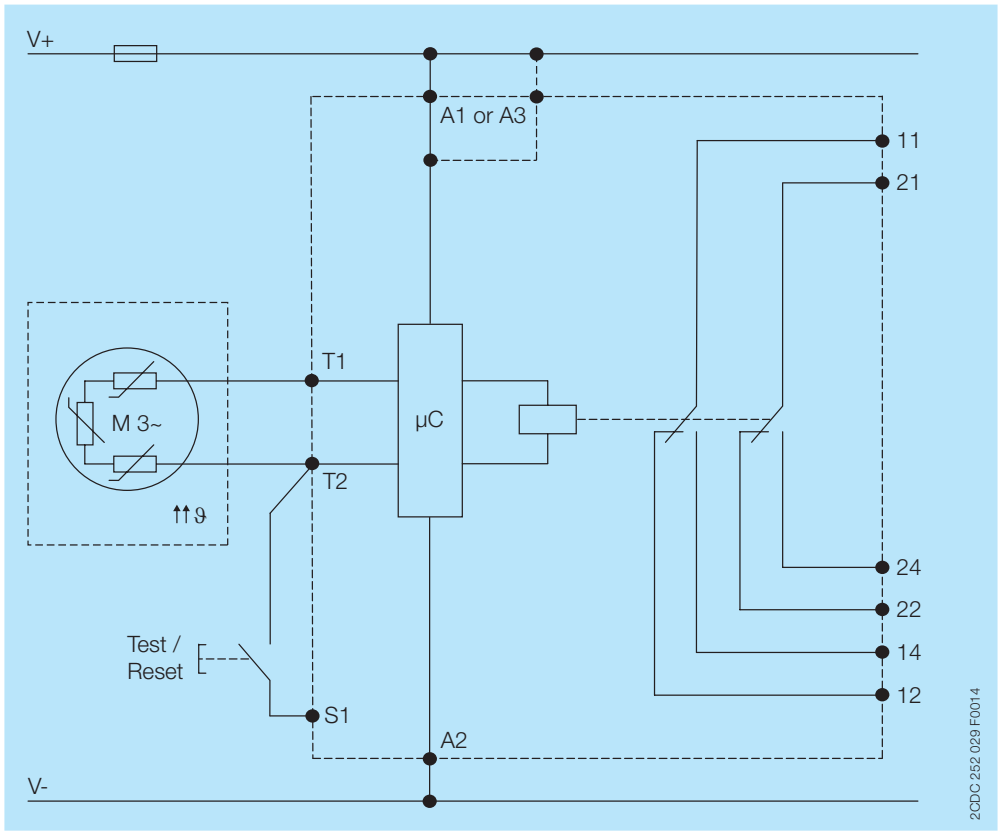

CM-MSS.33

Technical data

Data at T_a = 25 °C and rated values, unless otherwise indicated

Input circuit

Supply circuit		CM-MSS.32	CM-MSS.33
Rated control supply voltage U_s	A1-A2	24V AC/DC	220-240 V AC
	A2-A3	-	110-130 V A
Rated control supply voltage U_s tolerance		-15...+10 %	
Rated frequency		50-60 Hz	
Typical current / power consumption	24 V AC/DC	33 mA / 0.55 VA	-
	110-130 V AC	-	24 mA / 3 VA
	220-240 V AC	-	10 mA / 2.2 VA
Electrical insulation between supply circuit and measuring circuit		no	yes
Power failure buffering time		20 ms	

Measuring circuit / Sensor circuit		T1-T2
Number of sensor circuits		1
Sensor type		PTC type A (DIN/EN 44081, DIN/EN 44082)
Max. total resistance of sensors connected in series, cold states		< 750 Ω
Overtemperature monitoring	switch-off resistance (relays de-energize)	2.83 kΩ ± 1 %
	switch-on resistance (relays energize)	1.1 kΩ ± 1 %
Short-circuit detection		yes
	switch-off resistance (relays de-energize)	<12 Ω
	switch-on resistance (relays energize)	>19 Ω
Interrupted wire detection	switch-off resistance (relays de-energize)	dynamic
	switch-on resistance (relays energize)	not available
Test function		yes
Maximum voltage in sensor circuit	1.33 kOhm	2.5 V
	4 kOhm	3.7 V
	∞ kOhm	5.5 V
Maximum current in sensor circuit		3.7 mA
Maximum sensor cable length		2 x 100 m at 0.75 mm², 2 x 400 m at 2.5 mm²
Accuracy within the rated control supply voltage tolerance		0.5 %
Accuracy within the temperature range		0.1 %/K
Repeat accuracy (constant parameters)		on request
Reaction time of the safety function		<100 ms
Hardware fault tolerance (HFT)		0

Control circuit		S1-T2
Control function	manual reset	yes
	auto reset	adjustable
	remote reset	adjustable
Maximum no-load voltage (S1-T2 open)		5.5 V
Max. current (S1-T2 jumpered)		0.6 mA
Maximum cable length		2 x 100 m at 0.75 mm², 2 x 400 m at 2.5 mm²

User interface

Indication of operational states		
Control supply voltage	U	LED green
Relay status	R	LED yellow
Fault message	F	See ‘LEDs, status information and fault messages’ on page 5

Operating controls	
Test / Reset	front-face button

Output circuit

Kind of output	11-12/14	relay, 1st c/o (SPDT) contact
	21-22/24	relay, 2nd c/o (SPDT) contact
Operating principle		closed-circuit principle
Contact material		AgNi alloy, Cd free
Rated operational voltage U_e (IEC/EN 60947-1)		250 V AC
Minimum switching voltage / Minimum switching current		24 V / 10 mA
Maximum switching voltage / Maximum switching current		See 'Load limit curves' on page 11
Rated operating current I_e (IEC/EN 60947-5-1)	AC-12 (resistive) at 230 V	4 A
	AC-15 (inductive) at 230 V	3 A
	DC-12 (resistive) at 24 V	4 A
	DC-13 (inductive) at 24 V	2 A
AC Rating (UL 508)	utilization category (Control Circuit Rating Code)	B 300
	maximum rated operational voltage	250 V AC
	maximum continuous thermal current at B 300	4 A
	maximum making/breaking apparent power at B 300	3600/360 VA
Mechanical lifetime		30 x 10^6 switching cycles
Electrical lifetime	at AC12, 230 V AC, 4 A	0.1 x 10^6 switching cycles
Maximum fuse rating to achieve short-circuit protection	n/c contact	10 A fast-acting
	n/o contact	10 A fast-acting

General data

MTBF			on request	
Duty time			100 %	
Dimensions (W x H x D)		product dimensions	22.5 x 85.6 x 103.7 mm (0.89 x 3.37 x 4.08 in)	
		packaging dimensions	97 x 109 x 30 mm (3.82 x 4.29 x 1.18 in)	
Weight			**Screw connection technology**	**Easy Connect Technology (push-in)**
	net weight	CM-MSS.32	0.130 kg	0.120 kg
		CM-MSS.33	0.172 kg	0.162 kg
	gross weight	CM-MSS.32	0.157 kg	0.146 kg
		CM-MSS.33	0.199 kg	0.188 kg
Mounting			DIN rail (IEC/EN 60715), snap-on mounting without any tool	
Mounting position			any	
Minimum distance to other units			10 mm (0.394 in) if switching current > 2 A	
			10 mm (0.394 in) if switching current > 2 A	
Material of housing			UL 94 V-0	
Degree of protection		housing	IP50	
		terminals	IP20	

Electrical connection

		Screw connection technology	**Easy Connect Technology (push-in)**
Wire size	fine-strand with(out) wire end ferrule	1 x 0.5-2.5 mm² (1 x 20-14 AWG) 2 x 0.5-1.5 mm² (2 x 20-16 AWG)	2 x 0.5-1.5 mm² (2 x 20-16 AWG)
	rigid	1 x 0.5-4 mm² (1 x 20-12 AWG) 2 x 0.5-2.5 mm² (2 x 20-14 AWG)	2 x 0.5-1.5 mm² (2 x 20-16 AWG)
Stripping length		8 mm (0.32 in)	
Tightening torque		0.6-0.8 Nm (5.31-7.08 lb.in)	-
Wire end ferrule		according to DIN 46228-1-A, DIN 46228-4-E	

Environmental data

Ambient temperature ranges	operation	-25 °C...+60 °C
	storage	-40 °C...+85 °C
Damp heat, cyclic (IEC/EN 60068-2-30)		6 x 24 h cycle, 55 °C, 95 % RH
Climatic category (IEC/EN 60721-3-3)		3K5 (no condensation, no ice formation)
Vibration, sinusoidal (IEC/EN 60255-21-1)		Class 2
Shock (IEC/EN 60255-21-2)		Class 2

Isolation data

		CM-MSS.32	CM-MSS.33
Rated insulation voltage U_i (IEC/EN 60947-1, IEC/EN 60664-1)	Supply circuit / Measuring circuit[1)]	n/a	300 V AC
	Supply circuit / Output circuits	300 V AC	
	Measuring circuit[1)] / Output circuits	300 V AC	
	Output circuit 1 / Output circuit 2	300 V AC	
Rated impulse withstand voltage U_{imp} (IEC/EN 60947-1, IEC/EN 60664-1)	Supply circuit / Measuring circuit[1)]	n/a	4 kV / 6 kV
	Supply circuit / Output circuits	4 kV / 6 kV	
	Measuring circuit[1)] / Output circuits	4 kV / 6 kV	
	Output circuit 1 / Output circuit 2	4 kV	
Basic insulation (IEC/EN 60664-1)	Supply circuit / Measuring circuit[1)]	n/a	600 V AC
	Supply circuit / Output circuits	600 V AC	
	Measuring circuit[1)] / Output circuits	600 V AC	
	Output circuit 1 / Output circuit 2	300 V AC	
Test voltage, routine test (IEC/EN 60255-27, IEC/EN 61010-1)	Supply circuit / Measuring circuit[1)]	n/a	2.5 kV, 50 Hz, 1 min.
	Supply circuit / Output circuits	2.5 kV, 50 Hz, 1 min.	
	Measuring circuit[1)] / Output circuits	2.5 kV, 50 Hz, 1 min.	
Test voltage, type test (IEC/EN 60255-27)	Supply circuit / Measuring circuit[1)]	n/a	6 kV / 1.2 - 50 µs
	Supply circuit / Output circuits	6 kV / 1.2 - 50 µs	
	Measuring circuit[1)] / Output circuits	6 kV / 1.2 - 50 µs	
	Output circuit 1 / Output circuit 2	6 kV / 1.2 - 50 µs	
Protective separation (IEC/EN 61140, IEC/EN 50178)	Supply circuit / Measuring circuit[1)]	no	yes, up to 300 V
	Supply circuit / Output circuits	yes	
	Measuring circuit[1)] / Output circuits	yes	
	Output circuit 1 / Output circuit 2	no	
Pollution degree (IEC/EN 60664-1)		3	
Overvoltage category (IEC/EN 60664-1)		III	

[1)] Potential of measuring circuit = Potential of control circuit

Standards

Product standard	IEC/EN 60255-1; IEC/EN 60947-8
Low Voltage Directive	2006/95/EC
EMC directive	2004/108/EC
ATEX directive	94/9/EC
RoHS directive	2011/65/EC

Electromagnetic compatibility

Interference immunity to		IEC/EN 61000-6-1, IEC/EN 61000-6-2
electrostatic discharge	IEC/EN 61000-4-2	Level 3, 6 kV contact discharge, 8 kV air discharge
radiated, radio-frequency, electromagnetic field	IEC/EN 61000-4-3	Level 3, 10 V/m (1 GHz), 3 V/m (2 GHz), 1 V/m (2.7 GHz)
electrical fast transient / burst	IEC/EN 61000-4-4	Level 3, 2 kV / 5 kHz
surge	IEC/EN 61000-4-5	Level 3, Installation class 3, supply circuit and measuring circuit 1 kV L-L, 2 kV L-N
conducted disturbances, induced by radio-frequency fields	IEC/EN 61000-4-6	Level 3, 0.15-80 MHz, 10 V, 80 % AM (1kHz)
voltage dips, short interruptions and voltage variations	IEC/EN 61000-4-11	Class 3
harmonics and interharmonics	IEC/EN 61000-4-13	Class 3
Additional interference immunity according to product standard EN 60255-1 (reference on EN 60255-26_2011)		
radiated, radio-frequency, electromagnetic field	IEC/EN 61000-4-3	10 V/m (80 MHz - 3 GHz)
conducted disturbances, induced by radio-frequency fields	IEC/EN 61000-4-6	10 V at stated frequencies
damped oscillatory waves	IEC/EN 61000-4-18	Signal lines, symmetric coupling: 1 kV peak voltage Power supply, asymmetric coupling: 2.5 kV peak voltage,
Increased interference immunity acc. to EN 62061 for safety with the evaluation criterion "Fail-Safe" against		IEC/EN 61000-6-1, IEC/EN 61000-6-2
electrostatic discharge	IEC/EN 61000-4-2	Level 3, 6 kV contact discharge, 8 kV air discharge
radiated, radio-frequency, electromagnetic field	IEC/EN 61000-4-3	Level 3, 20 V/m (1 GHz), 6 V/m (2 GHz), 3 V/m (2.7 GHz)
electrical fast transient / burst	IEC/EN 61000-4-4	Level 3, 4 kV / 5 kHz
surge	IEC/EN 61000-4-5	Level 3, Installation class 3, supply circuit and measuring circuit 2 kV L-L, 4 kV L-N
conducted disturbances, induced by radio-frequency fields	IEC/EN 61000-4-6	Level 3, 10 V
voltage dips, short interruptions and voltage variations	IEC/EN 61000-4-11	Class 3
harmonics and interharmonics	IEC/EN 61000-4-13	Class 3
Interference emissions		IEC/EN 61000-6-3, IEC/EN 61000-6-4
high-frequency radiated	IEC/CISPR 22, EN 55022	Class B
high-frequency conducted	IEC/CISPR 22, EN 55022	Class B
high-frequency radiated	Germanischer Lloyd	increased requirements in the emergency call frequency band

Technical diagrams

Load limit curves

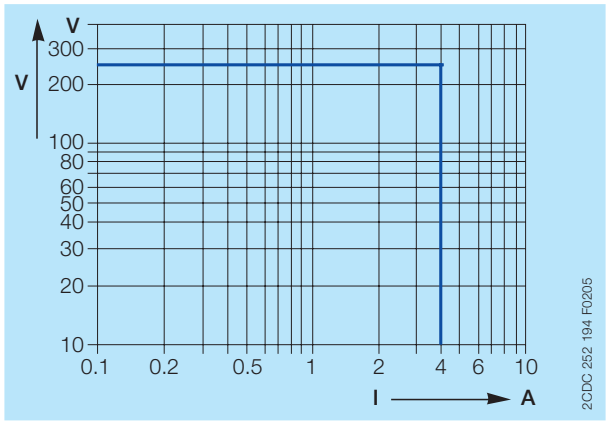

AC load (resistive)

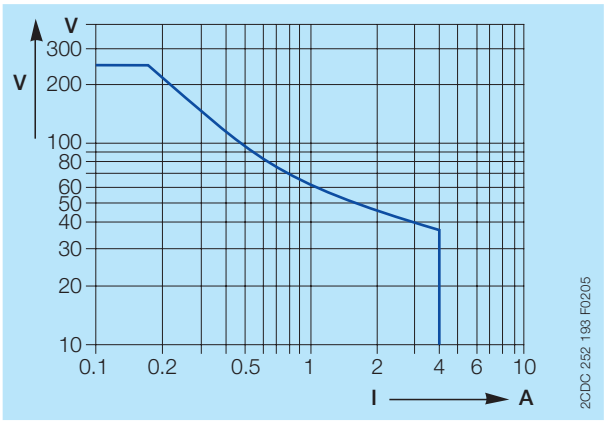

DC load (resistive)

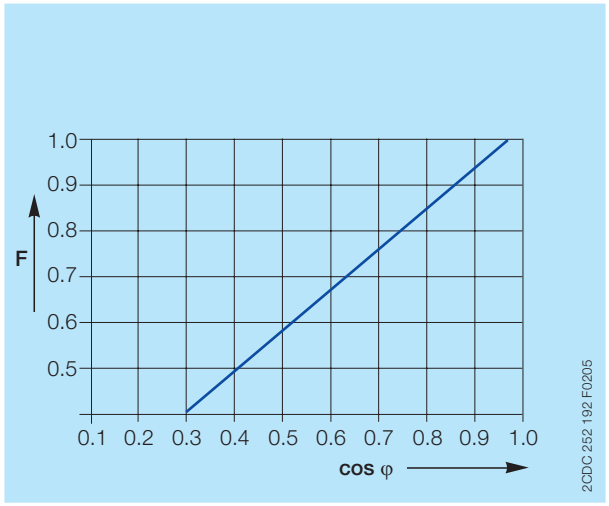

Reduction factor F for inductive AC load

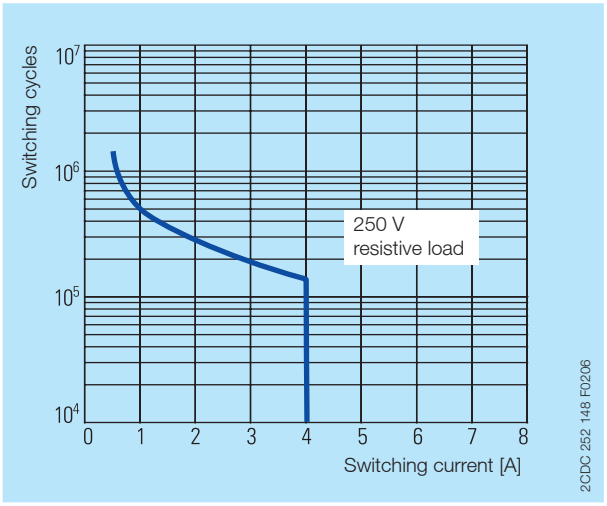

Contact life time / number of operations N
220 V 50 Hz 1 AC, 360 operations/h

Dimensions

in **mm** and inches

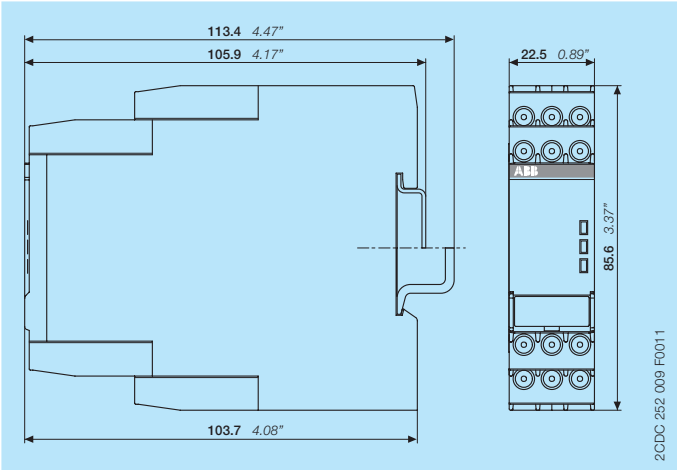

Accessories

in **mm** and inches

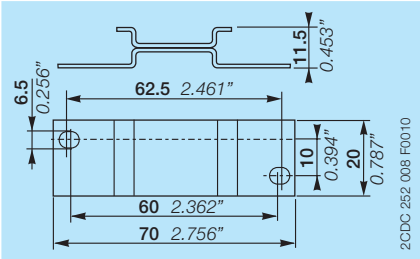

ADP.01 - Adapter for screw mounting

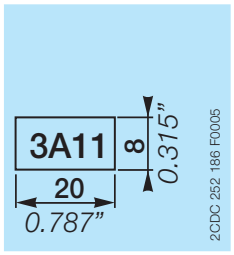

MAR.01 - Marker label for devices without DIP switches

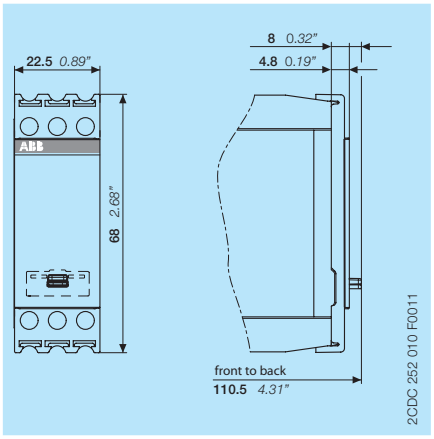

COV.11 - Sealable transparent cover

Further documentation

Document title	Document type	Document number
Electronic products and relays	Technical catalogue	2CDC 110 004 C02xx
Operating and installation instructions CM-MSS.32, CM-MSS.33	Instruction manual	1SVC 730 640 M0000

You can find the documentation on the internet at
http://new.abb.com/low-voltage/products/epr/monitors/thermistor-motor-protection-relays

CAD system files

You can find the CAD files for CAD systems at
http://abb-control-products.partcommunity.com/portal/portal/abb-control-products
-> Low Voltage Products & Systems -> Control Products -> Electronic Relays and Controls
-> Thermistor Motor Protection Relays.

Contact us

ABB STOTZ-KONTAKT GmbH
P. O. Box 10 16 80
69006 Heidelberg, Germany
Phone: +49 (0) 6221 7 01-0
Fax: +49 (0) 6221 7 01-13 25
E-mail: info.desto@de.abb.com

You can find the address of your
local sales organisation on the
ABB home page
http://www.abb.com/contacts
-> Low Voltage Products and Systems

Document number 2CDC 112 221 D0201 (12/2014)

Note:
We reserve the right to make technical changes or modify the contents of this document without prior notice. With regard to purchase orders, the agreed particulars shall prevail. ABB AG does not accept any responsibility whatsoever for potential errors or possible lack of information in this document.

We reserve all rights in this document and in the subject matter and illustrations contained therein. Any reproduction, disclosure to third parties or utilization of its contents – in whole or in parts – is forbidden without prior written consent of ABB AG.

Copyright© 2014 ABB
All rights reserved