Relay-Module DSRC4

Operating Instrcutions

English translation

Correct Use

The DSC-system consists of high-quality interface modules for DIN-rail installation. Besides their function as an interface with electrical isolation the units can also be used as fully-electrical circuit-breakers because of their very high output switching capacity. The relay module DSRC4 has four independent relay interfaces with LED displays.



Features

- *4 interfaces in one housing*
- *Only 5.6 mm / interface*
- *LED display for each channel*

Function

Interface modules are useful for power amplification and galvanic isolation between the controls and load circuit.

The DSRC4 module includes four relay interfaces that are completely independent of one another.

As a result, the space requirement is much less as compared to the individual components - four interfaces require only 22.5 mm, i.e. 5.6 mm per interface.

Installation

According to EN 60204-1 the unit is designed to be used in control cabinets with a minimum environmental protection of IP54. The housing is designed to be mounted on a 35 mm DIN rail according to DIN EN 60715 TH35.

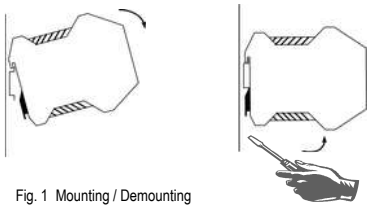

Fig. 1 Mounting / Demounting

Safety Precautions



- The installation and operation must be carried out by qualified personnel only,
  - who is familiar with the professional handling of machine equipment,
  - who is familiar with the valid rules of industrial safety and accident prevention,
  - who read and understood the operating instructions.
- The safe function of the device during machine operation cannot be guaranteed in case of wrong connection or improper operation. This may lead to fatal injuries.
- Pay attention to country specific regulations.
- The electrical installation must be performed after disconnecting the device and the machine from the mains supply.
- The wiring must be carried out according to the instructions of this operating manual.
- The person who programs the device must be protected against electrostatic discharge (ESD protection).
- Opening the device, any manipulation of the device and the avoidance of the safety facilities are not permitted.
- All relevant safety regulations and standards must be attended to.
- Non-observance of the safety regulations may cause death, severe injuries or substantial damage to property.
- Before use, please, read the operating instructions and keep it in a safe place. Make sure that the operating instructions are always available for installation, initial operation and maintenance.

Non-observance of the instructions above will cause the loss of warranty.

J02

E61-274-00

H. ZANDER GmbH & Co. KG • Am Gut Wolf 15 • 52070 Aachen • Germany
Tel +49 (0)241 9105010 • Fax +49 (0)241 91050138 • info@zander-aachen.de • www.zander-aachen.de

Relay-Module DSRC4

Operating Instrcutions

English translation

Electrical Connection

- At A11, A21, A31, A41 connect the input voltage DC24 V, 0 V connect at A12, A22, A32, A42.
- External fusing (6 A) of the output contacts 13-14, 23-24, 33-34, 43-44 must be provided.
- A line cross section of 2.5 mm^2 must not be exceeded

If the device does not function after commissioning, it must be returned to the manufacturer unopened. Opening the device will void the warranty.

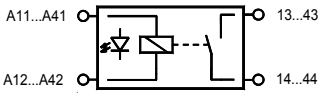

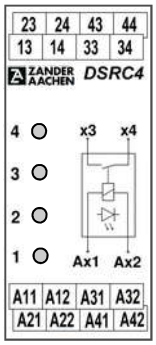

Fig. 2: Electrical Connection

A11-A12: Input 1 (DC24 V)
A21-A22: Input 2 (DC24 V)
A31-A32: Input 3 (DC24 V)
A41-A42: Input4 (DC24 V)
13-14: Output contact 1
23-24: Output contact 2
33-34: Output contact 3
43-44: Output contact 4

Maintenance

The device must be checked once per month for proper function and for signs of tampering.

The device is otherwise maintenance free, provided that it was installed properly.

Techn. Data

Input voltage	DC24 V, +15/-10%
Input resistance	1500 Ohm
LED´s	4x yellow, contact closed
Protection	IP20
Output	4 N/O AC 250 V
Switching capacity	AC: max. 8 A / 250 V / 2000 VA
	DC: max. 3.5 A / 24 V / 80 W
Contact life	mechanical 2x10^7 operations
Contact fuses	6 A
Max. line cross section	2.5 mm^2
Test voltage	2.5 kV (control voltage/contacts)
Rated impulse withstand voltage	4 kV (DIN VDE 0110-1)
Rated insulation voltage	250 V
Temperation range	-20^0 - + 60^{0}C
Weight	approx. 150 g
Mounting position	any

Dimensions

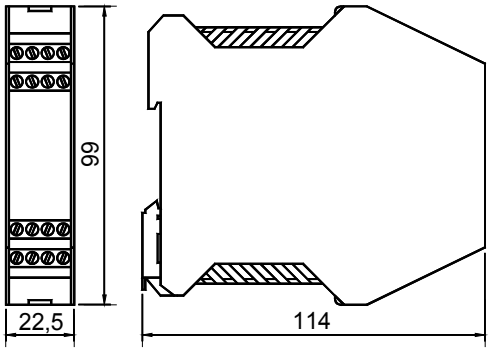

Variants

Order no. 459031	DSRC4 input voltage DC24 V
	(other input voltage on request)

J02

E61-274-00