

Encoder WDGN 58E

www.wachendorff-automation.com/wdgn58e

Wachendorff Automation

... systems and encoders

- Complete systems
- Industrial rugged encoders to suit your application
- Standard range and customer versions
- Maximum permissible loads
- 48-hour express production
- Made in Germany
- Worldwide distributor network

IndustrieROBUST

Encoder WDGN 58E configurable via NFC



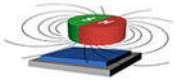

Wachendorff Apps WDGN

- Due to high quality electronics any number of pulses up to 16384 configurable via NFC
- HTL/TTL configurable via NFC
- Protection class IP67, at shaft input IP65
- High output frequency up to 1 MHz
- Reverse polarity protection and short-circuit protection at 4.75 VDC to 32 VDC

www.wachendorff-automation.com/wdgn58e

Configurable via NFC

Resolution	
Pulses per revolution PPR	1 PPR up to 16384 PPR

Mechanical Data	
Housing	
Flange	hollow shaft (blind-bored)
Flange material	aluminum
Housing cap	Stainless steel, NFC cover: Thermoplastic polyamide
Torque supports	incl. 1 torque support WDGDS10001
- 1. Spring plate compensation	axial: ±0.8 mm, radial: ±0.2 mm
- Max. operating speed	6000 rpm up to max. protection rating +60 °C
- 2. Cylinder pin 4 mm	needs accessories WDGDS10005
- Compensation	axial: ±0.5 mm, radial: ±1.5 mm, Max. operating speed: 3000 rpm
Housing	Ø 58 mm

Shaft(s)	
Shaft material	stainless steel
Starting torque	approx. 1.6 Ncm at ambient temperature
Fixing	permanently attached clambing ring
Shaft	Ø 6 mm
Advice	with adapter sleeve
Shaft length	L: 12 mm
Insertion depth min.	11 mm
Insertion depth max.	15 mm
Max. Permissible shaft loading radial	80 N
Max. Permissible shaft loading axial	50 N
Shaft	Ø 8 mm
Advice	with adapter sleeve
Shaft length	L: 12 mm
Insertion depth min.	11 mm
Insertion depth max.	15 mm
Max. Permissible shaft loading radial	80 N
Max. Permissible shaft loading axial	50 N
Shaft	Ø 10 mm
Advice	with adapter sleeve
Shaft length	L: 12 mm
Insertion depth min.	11 mm
Insertion depth max.	15 mm
Max. Permissible shaft loading radial	80 N
Max. Permissible shaft loading axial	50 N
Shaft	Ø 12 mm
Shaft length	L: 12 mm
Insertion depth min.	11 mm
Insertion depth max.	15 mm
Max. Permissible shaft loading radial	80 N
Max. Permissible shaft loading axial	50 N
Shaft	Ø 14 mm
Shaft length	L: 12 mm
Insertion depth min.	11 mm
Insertion depth max.	15 mm
Max. Permissible shaft loading radial	80 N
Max. Permissible shaft loading axial	50 N
Shaft	Ø 15 mm
Shaft length	L: 12 mm
Insertion depth min.	11 mm
Insertion depth max.	15 mm
Max. Permissible shaft loading radial	80 N
Max. Permissible shaft loading axial	50 N

Bearings	
Bearings type	2 precision ball bearings
Nominale service life	1 x 10'9 revs. at 100 % rated shaft load 1 x 10'10 revs. at 40 % rated shaft load 1 x 10'11 revs. at 20 % rated shaft load
Max. operating speed	6000 rpm

Machinery Directive: basic data safety integrity level	
$MTTF_d$	1200 a
Mission time (TM)	25 a
Nominale service life (L10h)	1 x 10'11 revs. at 20 % rated shaft load and 6000 rpm
Diagnostic coverage (DC)	0 %

Electrical Data	
Power supply/Current consumption	4,75 VDC up to 32 VDC: typ. 80 mA
Output circuit	HTL HTL, inv. TTL TTL, RS422 compatible, inv.
Pulse frequency	HTL up to 16384 ppr: max. 600 kHz TTL up to 16384 ppr: max. 1 MHz
Channels	ABN CH4 and inverted signals
Load	max. 40 mA / channel
Circuit protection	inverse-polarity and short-circuit protection
Nullimpuls setzen:	Setzen: SET = +UB für 2 s Deaktiviert: SET = GND

Accuracy	
Phase offset	90° ± max. 8.5 % of the period duration
pulse-/pause-ratio	50 % ± max. 7 %

General Data	
Weight	approx. 200 g
Connections	cable or connector outlet
Protection rating (EN 60529)	Housing: IP65, IP67; shaft sealed: IP65
Operating temperature	Connector: -40 °C up to +85 °C, cable: -20 °C up to +80 °C
Storage temperature	Connector: -40 °C up to +100 °C, cable: -30 °C up to +80 °C

More Information
General technical data and safety instructions **http://www.wachendorff-automation.com/gtd**
Options **http://www.wachendorff-automation.com/acc**

Cable connection L3 radial with 2 m cabel

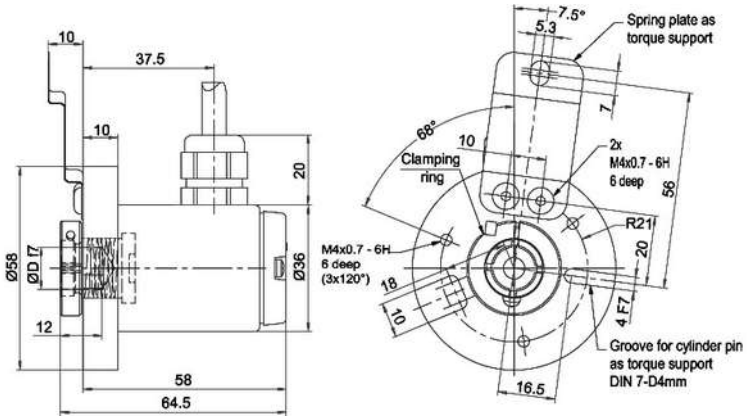

Description		ABN inv. poss.
L3	radial, shield connected to encoder housing	•

Assignments		
	L3	**L3**
Circuit	BAS	ADV
GND	WH	WH
(+) Vcc	BN	BN
A	GN	GN
B	YE	YE
N	GY	GY
CH4	-	GYPK
SET	-	PK
A inv.	RD	RD
B inv.	BK	BK
N inv.	VT	VT
CH4 inv.	-	RDBU
Shield	flex	flex

Sensor-connector (M12x1) SC radial, 8-, 12-pin

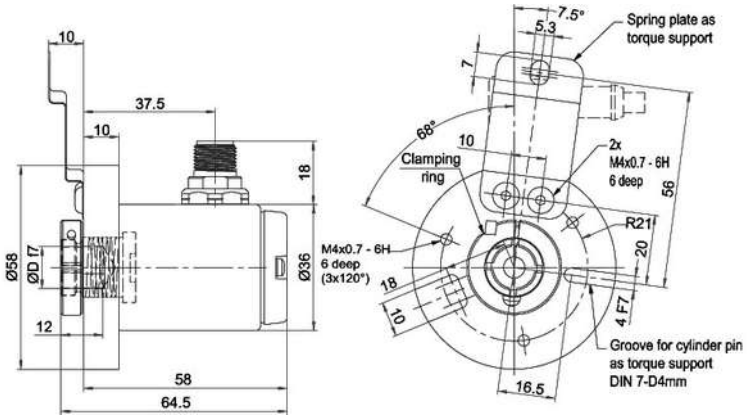

Description		ABN inv. poss.
SC8	radial, 8-pin, Connector connected to encoder housing	•
SC12	radial, 12-pin, Connector connected to encoder housing	•

Assignments		
	SC8	**SC12**
	8-pin	**12-pin**
	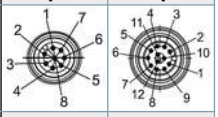	
Circuit	BAS	ADV
GND	1	3
(+) Vcc	2	1
A	3	4
B	4	6
N	5	8
CH4	-	11
SET	-	5
A inv.	6	9
B inv.	7	7
N inv.	8	10
CH4 inv.	-	12
n. c.	-	2
Shield	-	-

Options

Cable length	Order key
The encoder WDGN 58E can be supplied with more than 2 m cable. The maximum cable length depends on the supply voltage and the frequency; see Downloads: „General technical Data“. Please extend the standard order code with a three figure number, specifying the cable length in decimetres. Example: 5 m cable = 050	**XXX = Decimeter**

Example Order No.	Type					Your encoder
WDGN 58E	WDGN 58E					WDGN 58E
	Bore size					
14	06; 08; 10; 12; 14; 15					
	Pulses per revolution PPR:					
X	configurable 1-16384 Other PPRs on request					
	Channels:					
X	ABN, ABN+CH4					
	Output circuit					
BAS	**Resolution PPR**	**Power supply VDC**	**Output circuit**	**Light reserve warning**	**Order key**	
	configurable 1-16384	4.75 - 32	configurable HTL, TTL (A,B,N + inv.)	-	BAS	
		4.75 - 32	configurable HTL, TTL (A,B,N,CH4 + inv.)	-	ADV	
	Electrical connections					
L3	**Description**			**ABN inv. poss.**	**Order key**	
	Cable: length (2 m standard, WDG 58T: 1 m)					
	radial, shield connected to encoder housing			•	L3	
	Connector: (shield connected to encoder housing)					
	sensor-connector, M12x1, 8-pin, radial			•	SC8	
	sensor-connector, M12x1, 12-pin, radial			•	SC12	
	Options					
	Description			**Order key**		
	Without option			Empty		
	Cable length			XXX = Decimeter		

Example Order No.=	WDGN 58E	14	X	X	BAS	L3		WDGN 58E							Your encoder



For further information please contact our local distributor.
Here you find a list of our distributors worldwide.
https://www.wachendorff-automation.com/

WACHENDORFF

Wachendorff Automation GmbH & Co. KG
Industriestrasse 7 • 65366 Geisenheim
Germany

Phone: +49 67 22 / 99 65 25
Fax: +49 67 22 / 99 65 70
E-Mail: wdg@wachendorff.de
www.wachendorff-automation.de