THE INFORMATION CONTAINED IN THIS DRAWING IS THE SOLE PROPERTY OF L-COM, INC. ANY REPRODUCTIONS IN PART OR WHOLE WITHOUT THE WRITTEN PERMISSION OF L-COM, INC. IS PROHIBITED.

REVISIONS			
REV	DESCRIPTION	DATE	CHANGED BY
G	ECN 99999: UPDATED DRAWING AND NEW FORMAT	1/20/10	D.FRISIELLO
H	ECN 5937: ADDED NOTE FOR PANEL MOUNTING	1/23/12	D.FRISIELLO

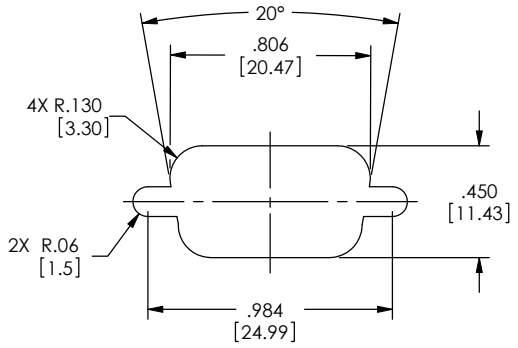

RECOMMENDED PANEL OPENING
(MAX PANEL THICKNESS: 0.06")

H **NOTE: DIFFERENT STANDOFFS AND JACK SCREWS ARE REQUIRED FOR PANEL MOUNTING. SEE WWW.L-COM.COM OR MASTER CATALOG FOR DETAILS.**

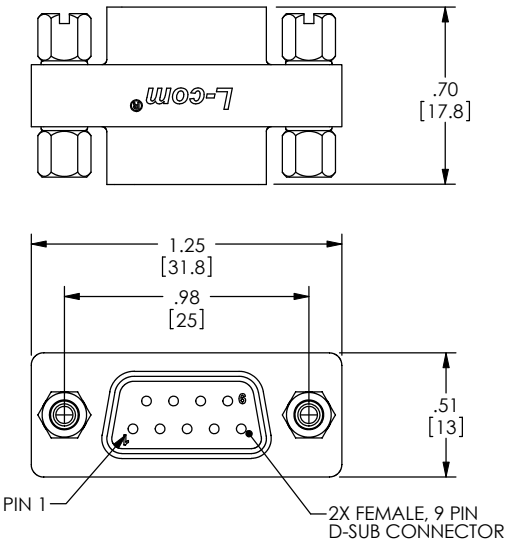

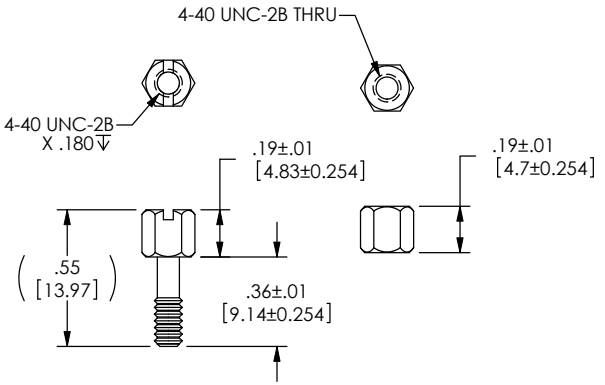

JACKSCREW & HEX STANDOFF
SPECIFICATION

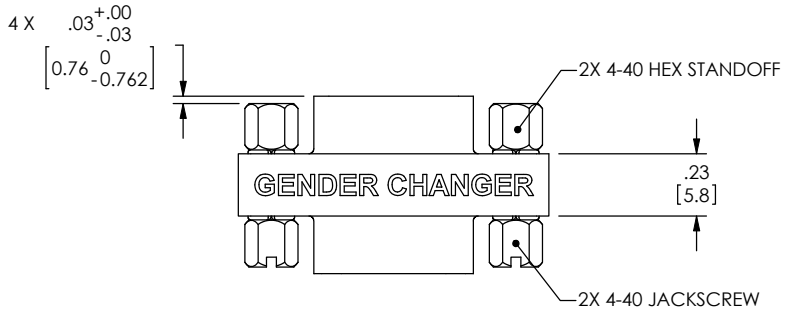

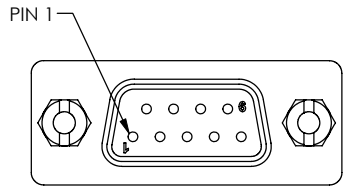

NOTES:

MATERIAL:
SHELL: STEEL
CONTACTS: COPPER ALLOY
HARDWARE: BRASS
INSULATOR: PBT FIBER REINFORCED (UL94V-0 RATED)

FINISH:
SHELL: TIN/NICKEL PLATED
CONTACTS: GOLD FLASH PLATED, 1-5µ INCHES
HARDWARE: NICKEL PLATED

ELECTRICAL:
CURRENT RATING: 3 AMP
INSULATION RESISTANCE: 1000 MΩ MIN @500 VDC
DIELECTRIC WITHSTANDING VOLTAGE: 1000 VAC (FOR ONE MINUTE)

MISCELLANEOUS:
OPERATING TEMPERATURE RANGE: -55°C TO +105°C.
ALL CONTACTS WIRED STRAIGHT THROUGH.
COMPONENT SHALL BE TESTED FOR CONTINUITY.

LABELING:
PANTONE 2945 BLUE. "L-COM" FONT MyriaMM ITALIC.
"GENDER CHANGER" FONT ARIAL BOLD, TEXT HEIGHTS; .085"
TEXT COLOR; WHITE.

PACKAGING:
COMPONENT SHALL BE INDIVIDUALLY PACKAGED IN ACCORDANCE WITH L-COM SPECIFICATION PS-0031.

RoHS Compliant ✔

UNLESS OTHERWISE SPECIFIED, DIMENSIONS ARE IN INCHES [mm]
DIMENSIONAL TOLERANCES: .X = ±.1 .XX = ±.01 .XXX = ±.005
ANGULAR TOLERANCES: ALL = ± 1°
PROJECTION

APPROVALS	DATE
DRAWN BY D.PARHAM	11/12/2001
CHECKED BY T.CLARK	11/12/2001
APPROVED BY R.CARRICK	11/13/2001

CONFIGURATION DETAILS OF UNDIMENSIONED FEATURES MAY VARY
COLOR VARIATIONS MAY OCCUR

L-com Global Connectivity
45 BEECHWOOD DRIVE
NORTH ANDOVER, MA
01845

CATEGORY: D-SUBMINIATURE
PRODUCT DESCRIPTION: GENDER CHANGER, DB9 FEMALE/FEMALE

SIZE	FSCM NO.	DWG. NO.	REV.
B	43321	DGB9F	H

SCALE: 2:1 | CAD FILE: DGB9F.SLDDRW | SHEET 1 OF 1