# 12 way nylon terminal strips

## Product overview

- Moulded from:
  - Natural PA6 (standard, CTSN400)
  - Cream PA66 (CTSN500)
  - Grey PA66 glass fibre (CTSN600)
- Available with or without wire protection
- Passes 960°C glow-wire test according to EN 60695-2-11
- Printing available on request
- Easily cut to size
- Supplied cut to length on request
- Closed inserts (middle barrier) option
- Captive terminal screws
- , , , approved

Part Numbers shown are for standard PA6 material (e.g. CTSN433/12)

For CSTN500 PA66 material change first number to 5 (e.g. CTSN533/12)

For CSTN600 PA66+GF material change first number to 6 (e.g. CTSN633/12)

| SPECIFICATION | | |
|---|---|---|
| Voltage | CTSN431-433<br>CTSN434-438 | 450VAC<br>750VAC (UL600VAC) |
| Working temperature | CTSN400<br>CTSN500<br>CTSN600 | -30°C to +110°C<br>-30°C to +110°C<br>-30°C to +160°C |
| Moulding | CTSN400<br>CTSN500<br>CTSN600 | UL94-V2 PA6<br>UL94-V0 PA66<br>UL94-V0 PA66 + GF |
| Standard insert | Nickel-plated brass | |
| Terminal screws | Zinc-plated steel CQ-15 | |
| Wire protectors | Stainless steel | |

*CTSN400*



*CTSN500 raised base*



## Standard type

| PART NO. | WIRE PROTECTION | INSERT DIAMETER | CABLE ACCEPTANCE | TERMINAL SCREWS | LENGTH | WIDTH | HEIGHT | PITCH | FIXING HOLE DIAMETER | MAX CURRENT | UL RATING |
|---|---|---|---|---|---|---|---|---|---|---|---|
| CTSN431/12W | No | 3.2mm | 4.0mm²/12AWG | M3 | 94mm | 18mm | 15mm | 8mm | 2.8mm | 32A | 20A |
| CTSN431/12 | Yes | 3.2mm | 2.5mm²/14AWG | M3 | 94mm | 18mm | 15mm | 8mm | 2.8mm | 24A | 15A |
| CTSN433/12W | No | 3.5mm | 6.0mm²/10AWG | M3 | 116mm | 21mm | 16mm | 10mm | 2.8mm | 41A | 30A |
| CTSN433/12 | Yes | 3.5mm | 4.0mm²/12AWG | M3 | 116mm | 21mm | 16mm | 10mm | 2.8mm | 32A | 20A |
| CTSN434/12W | No | 4.4mm | 10.0mm²/8AWG | M3.5 | 140mm | 23mm | 18mm | 12mm | 2.8mm | 57A | 50A |
| CTSN434/12 | Yes | 4.4mm | 6.0mm²/10AWG | M3.5 | 140mm | 23mm | 18mm | 12mm | 2.8mm | 41A | 30A |
| CTSN435/12W | No | 6.0mm | 16.0mm²/6AWG | M4 | 159mm | 26mm | 22.5mm | 13.5mm | N/A | 76A | 65A |
| CTSN435/12 | Yes | 6.0mm | 10.0mm²/8AWG | M4 | 164.5mm | 29mm | 23mm | 14mm | N/A | 57A | 65A |
| CTSN438/12W | No | 7.5mm | 35mm²/2AWG | M5 | 177mm | 31mm | 27.5mm | 15mm | N/A | 125A | 85A |

Standard type, no wire protection

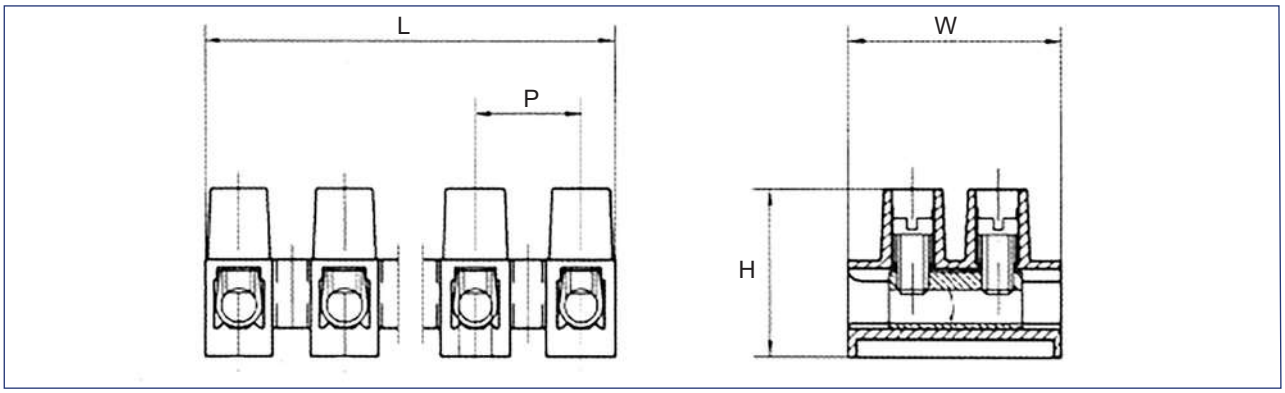




+44 (0)1638 716101 | sales@camdenboss.com | www.camdenboss.com

We operate a constant improvement policy, our products are subject to change without notice.



Vers 2

002 PCB TERMINAL BLOCKS
081 TERMINAL STRIPS
095 WIRE TO BOARD CONNECTORS
100 CIRCULAR CONNECTORS
118 IP68 CONNECTORS
158 INTERFACE MODULES AND RELAY BASES

## Raised base

| PART NO. | WIRE PROTECTION | INSERT DIAMETER | CABLE ACCEPTANCE | TERMINAL SCREWS | LENGTH | WIDTH | HEIGHT | PITCH | FIXING HOLE DIAMETER | MAX CURRENT | UL RATING |
|---|---|---|---|---|---|---|---|---|---|---|---|
| CTSN431/12WR | No | 3.2mm | 4.0mm$^2$/12AWG | M3 | 94mm | 18mm | 17.5mm | 8mm | 2.8mm | 32A | 20A |
| CTSN431/12R | Yes | 3.2mm | 2.5mm$^2$/14AWG | M3 | 94mm | 18mm | 17.5mm | 8mm | 2.8mm | 24A | 20A |
| CTSN433/12WR | No | 3.5mm | 6.0mm$^2$/10AWG | M3 | 116mm | 21mm | 18mm | 10mm | 2.8mm | 41A | 30A |
| CTSN433/12R | Yes | 3.5mm | 4.0mm$^2$/12AWG | M3 | 116mm | 21mm | 18mm | 10mm | 2.8mm | 32A | 30A |
| CTSN434/12WR | No | 4.4mm | 10.0mm$^2$/8AWG | M3.5 | 140mm | 23mm | 20.4mm | 12mm | 2.8mm | 57A | 50A |
| CTSN434/12R | Yes | 4.4mm | 6.0mm$^2$/10AWG | M3.5 | 140mm | 23mm | 20.4mm | 12mm | 2.8mm | 41A | 50A |
| CTSN435/12WR | No | 6.0mm | 16.0mm$^2$/6AWG | M4 | 164.5mm | 29mm | 26.3mm | 14mm | 3.6mm | 76A | 65A |
| CTSN435/12R | Yes | 6.0mm | 10.0mm$^2$/8AWG | M4 | 164.5mm | 29mm | 26.3mm | 14mm | 3.6mm | 57A | 65A |

*Raised base types - provides increased isolation*

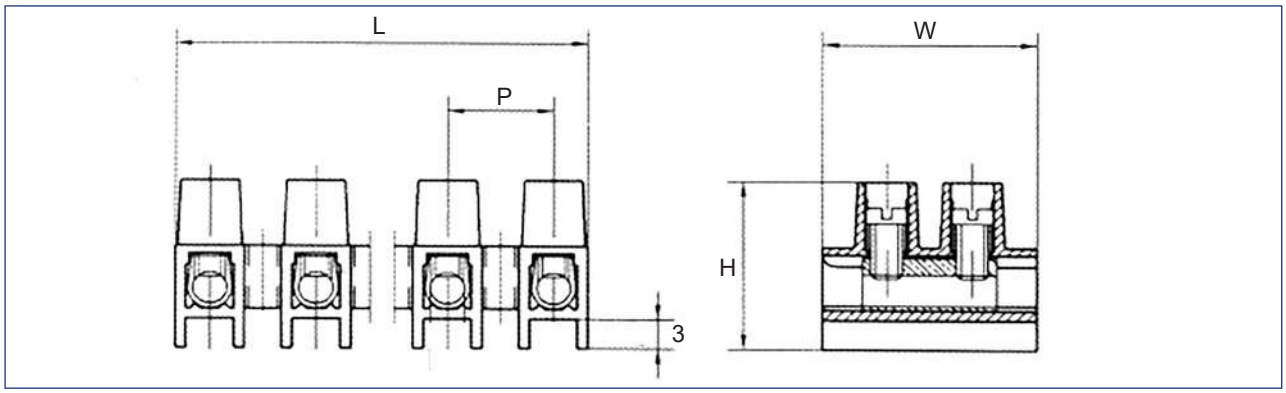


## KEY FEATURES

V2 or V0 material | Easily cut to required size | V0 types meet 960°C GWT

CUSTOMISE ME · PRINTING ·

# Pluggable terminal strips

## Product overview

- Moulded in natural PA6, self extinguishing to UL94-V2
- Passes 960°C glow-wire test according to EN 60695-2-11
- Easily cut to size
- Supplied cut to length on request
- Printing available on request
- CE approved

*CTSN MF*

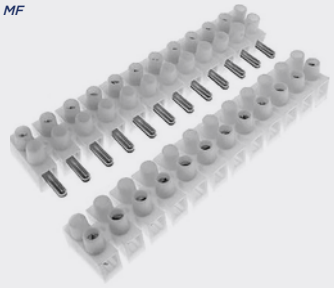

| SPECIFICATION | |
|---|---|
| Voltage (max | 450V AC |
| Working temperature | -30°C to +110°C (PA6.6 to +150°C) |
| Moulding | UL94-V2 self extinguishing PA6 |
| Conducting bush | Nickel-plated brass |
| Terminal screws | Zinc-plated steel |

## Standard type

| PART NO. | PITCH/ UL RATING | INSERT DIAMETER | CABLE ACCEPTANCE | TERMINAL SCREWS | LENGTH | WIDTH | HEIGHT | PITCH | FIXING HOLE DIAMETER | MAX CURRENT |
|---|---|---|---|---|---|---|---|---|---|---|
| CTSN431/12MF | 8mm/6A | 2.9mm | 4.0mm²/12AWG | M3 | 94mm | 16mm | 15.5mm | 8mm | 2.75mm | 17.5A |
| CTSN433/12MF | 10.25mm/10A | 3.4mm | 2.5mm²/14AWG | M3 | 119.4mm | 20.5mm | 16.4mm | 10.25mm | 3.2mm | 24A |
| CTSN434/12MF | 12.5mm/16A | 4.3mm | 6.0mm²/10AWG | M3.5 | 143mm | 23.5mm | 19mm | 12.3mm | 3.5mm | 57A |

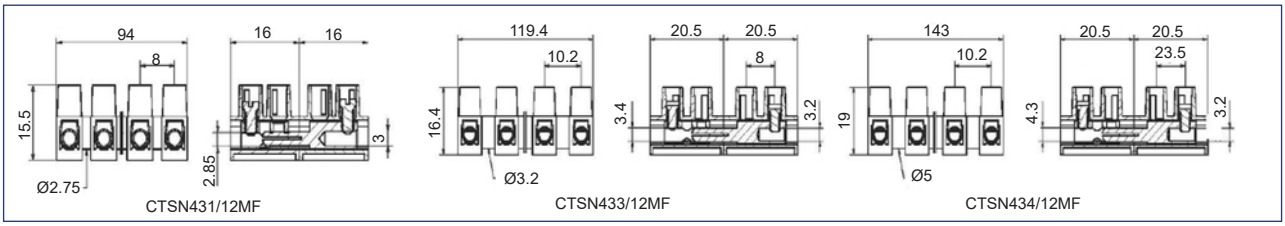


# Strain relief

## Product overview

- Clamps external conductors in lighting fixtures according to EN60598
- Natural colour PA6
- Relieves strain on cables
- Prevents conductors from twisting
- Protects wire coating from abrasion and friction

*CSR*

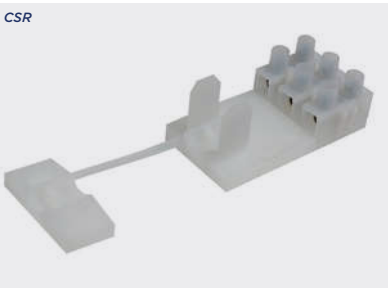

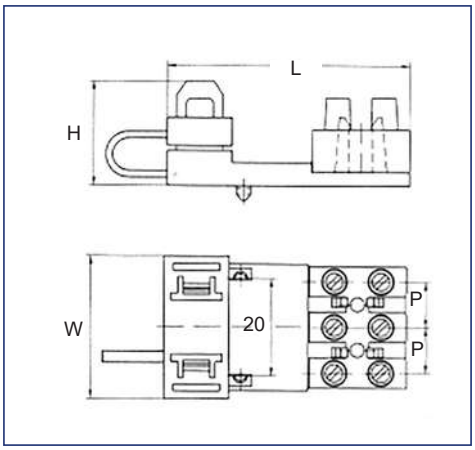


| PART NO. | TERMINAL STRIP | LENGTH | WIDTH | HEIGHT |
|---|---|---|---|---|
| CSR1 | CTSN431 | 49.5mm | 31mm | 22.5mm |
| CSR2 | CTSN433 | 52.5mm | 31mm | 22.5mm |
| CSR3 | CTSN434 | 54.5mm | 31mm | 22.5mm |

## KEY FEATURES

Pluggable style | Easily cut to required size | V0 to GWT 960°C

CUSTOMISE ME · PRINTING



+44 (0)1638 716101 | sales@camdenboss.com | www.camdenboss.com

We operate a constant improvement policy, our products are subject to change without notice.