7206 BE-2RZP

Popular item

Dimensions

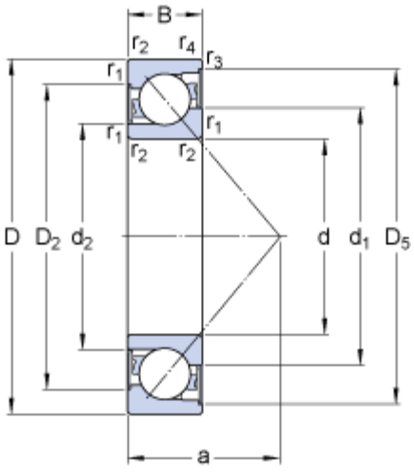

d		30	mm
D		62	mm
B		16	mm
d_1	≈	42.65	mm
d_2	≈	36.13	mm
D_2	≈	51.8	mm
a		27.3	mm
$r_{1,2}$	min.	1	mm
$r_{3,4}$	min.	0.6	mm

Abutment dimensions

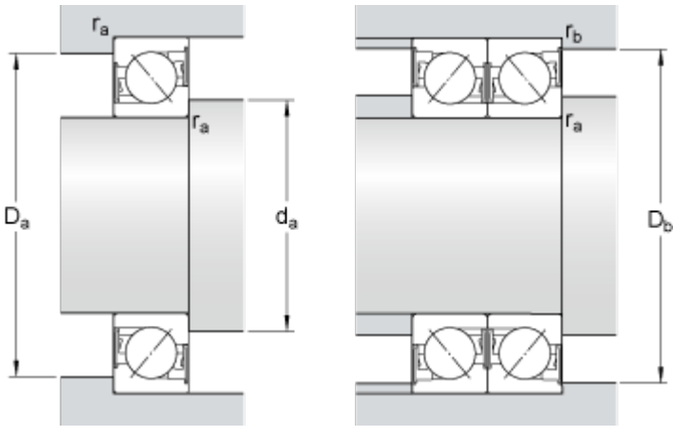

d_a	min.	35.6	mm
d_a	max.	42	mm
D_a	max.	56.4	mm
D_b	max.	57.8	mm
r_a	max.	1	mm
r_b	max.	0.6	mm

Calculation data

Basic dynamic load rating	C	22.5	kN
Basic static load rating	C_0	14.3	kN
Fatigue load limit	P_u	0.61	kN
Reference speed		13000	r/min
Limiting speed		10000	r/min
Calculation factor	A	0.00377	
Calculation factor	k_r	0.095	
Calculation factor	e	1.14	

Single bearing or bearing pair arranged in tandem

Calculation factor	X	0.35	

Calculation factor	Y_0	0.26
Calculation factor	Y_2	0.57

Bearing pair arranged back-to-back or face-to-face

Calculation factor	X	0.57
Calculation factor	Y_0	0.52
Calculation factor	Y_1	0.55
Calculation factor	Y_2	0.93

Lubrication

Standard grease	GXN

Mass

Mass bearing	0.26	kg