O6H204

Diffuse reflection sensor with background suppression

O6H-FNKG

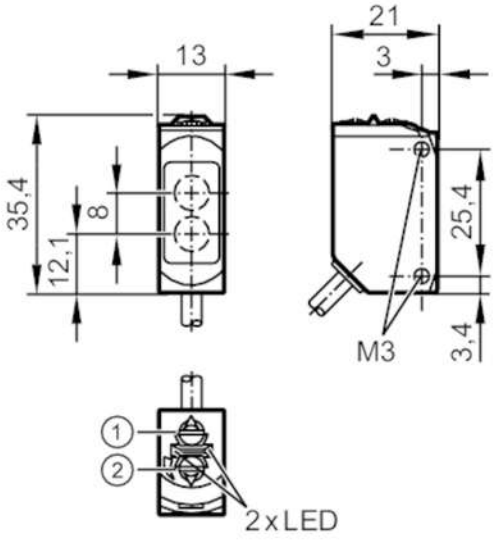

1: output function switch
2: potentiometer sensitivity
receiver in upper lens
transmitter in lower lens

Product characteristics		
Type of light		red light
Housing		rectangular
Application		
Special feature		Background suppression
Function principle		Diffuse reflection sensor
Electrical data		
Operating voltage	[V]	10...30 DC
Current consumption	[mA]	22; ((24 V))
Protection class		III
Reverse polarity protection		yes
Type of light		red light
Wave length	[nm]	633
Outputs		
Electrical design		NPN
Output function		light-on/dark-on mode; (selectable)
Max. voltage drop switching output DC	[V]	2.5
Permanent current rating of switching output DC	[mA]	100
Switching frequency DC	[Hz]	1000
Short-circuit protection		yes
Type of short-circuit protection		pulsed

O6H204

Diffuse reflection sensor with background suppression

O6H-FNKG

Detection zone			
Range	[mm]	2...200; (white paper 200 x 200 mm)	
Range on white object (90 % remission)	[mm]	2...200	
Range on grey object (18 % remission)	[mm]	4...200	
Range on black object (6 % remission)	[mm]	8...200	
Range adjustable		yes	
Max. light spot diameter	[mm]	8	
Light spot dimensions refer to		at maximum range	
Background suppression available		yes	
Operating conditions			
Ambient temperature	[°C]	-25...60	
Protection		IP 65; IP 67	
Tests / approvals			
EMC		EN 60947-5-2	
MTTF	[years]	683	
UL approval		UL Approval no.	E008
Mechanical data			
Weight	[g]	60.15	
Housing		rectangular	
Dimensions	[mm]	35.4 x 13 x 21	
Materials		housing: ABS; PPSU; Sealing: EPDM	
Lens material		PMMA	
Lens alignment		side lens	
Tightening torque	[Nm]	0.5	
Displays / operating elements			
Display		switching status	1 x LED, yellow
		operation	1 x LED, green
Remarks			
Remarks		operating voltage "supply class 2" according to cULus	
Pack quantity		1 pcs.	

O6H204

Diffuse reflection sensor with background suppression

O6H-FNKG

Electrical connection

Cable: 2 m, PUR; 3 x 0.25 mm²

Connection

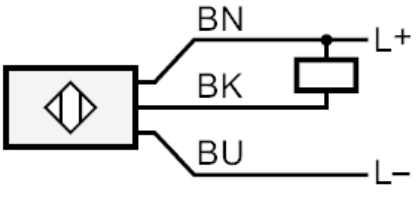

	Core colours :
BN =	brown
BK =	black
BU =	blue

Diagrams and graphs

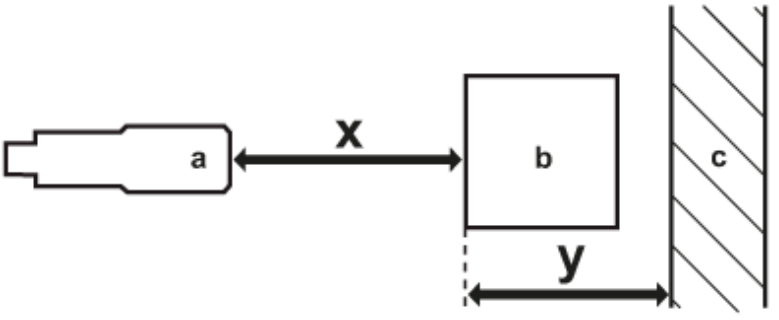

a: sensor
b: object
c: background
x: distance sensor/object [mm]
y: min. distance object/background [mm]

O6H204

Diffuse reflection sensor with background suppression

O6H-FNKG

accuracy graph

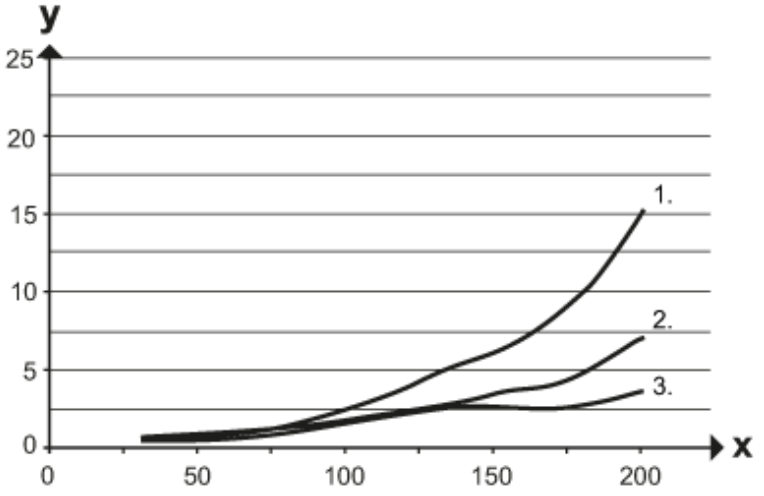

x: distance sensor/object [mm]

y: min. distance object/background [mm]

1 = object black (6 % remission) , background white (90 % remission)

2 = object grey (18 % remission) , background white (90 % remission)

3 = object white (90 % remission) , background white (90 % remission)