E12563

Y connection cable

YDOGS060PLS0005H03DOGH030MSS

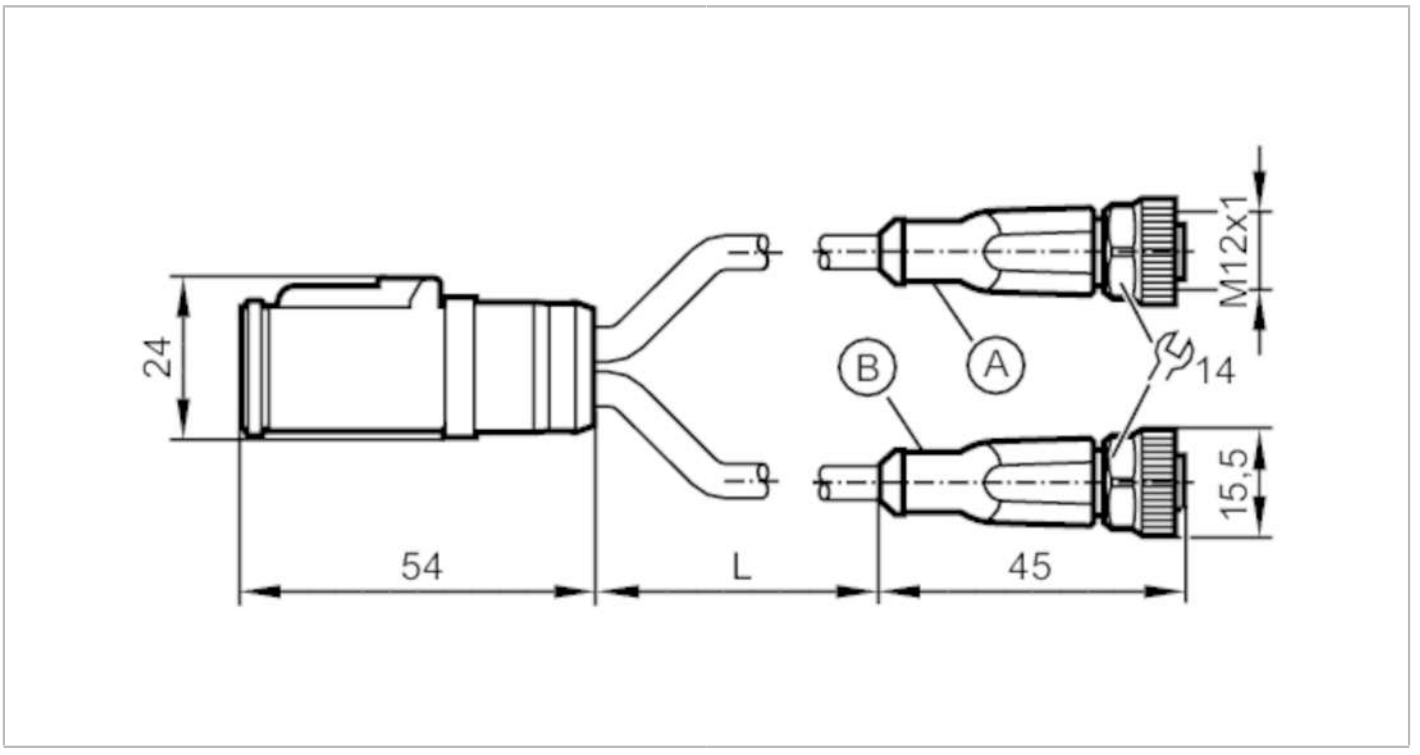

Application			
Special feature		Free from silicone; Halogen-free; Drag chain suitability	
Free from silicone		yes	
Electrical data			
Operating voltage	[V]	8...32 DC	
Protection class		III	
Max. current load total	[A]	4	
Operating conditions			
Ambient temperature	[°C]	-40...80	
Ambient temperature (moving)	[°C]	-20...80	
Protection		IP 67; (mating connector plugged in)	
Mechanical data			
Weight	[g]	461.3	
Materials		PA; socket: TPU orange; Sealing: FKM	
Material nut		brass, nickel-plated	
Number of ports splitter box		2	
Drag chain suitability		yes	
Drag chain suitability		bending radius for flexible use	min. 10 x cable diameter
		travel speed	max. 3.3 m/s for a horizontal travel length of 5 m and max. acceleration of 5 m/s²
		bending cycles	> 5 Mio.
		torsional strain	± 180 °/m

E12563

Y connection cable

YDOGS060PLS0005H03DOGH030MSS

Remarks	
Pack quantity	1 pcs.

Electrical connection - DEUTSCH connector

Cable: 5 m, PUR, Halogen-free, black, Ø 5.4 mm; 6 x 0.5 mm² (28 x Ø 0.15 mm)

Connector: 1 x DEUTSCH connector, straight



Connection

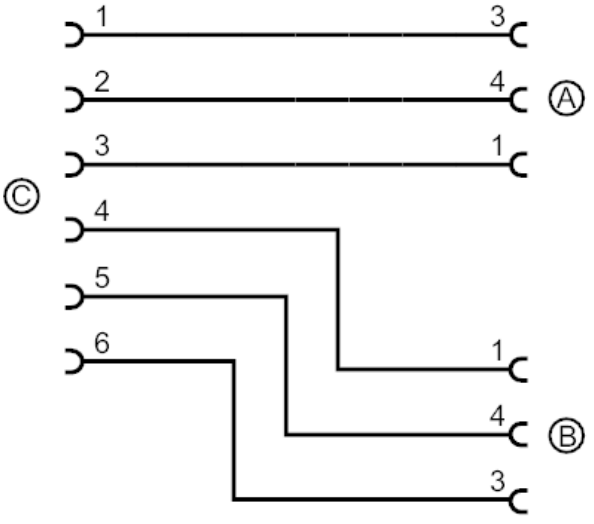

Electrical connection - socket

Cable: 5 m, PUR, Halogen-free, black, Ø 5.4 mm; 3 x 0.5 mm² (28 x Ø 0.15 mm)

Connector: 2 x M12, straight; coding: A; Locking: brass, nickel-plated; Tightening torque: 0.6...1.5 Nm

