E7377A

AS-Interface flat cable splitter

FC Splitter ye/ye II 3D/3G

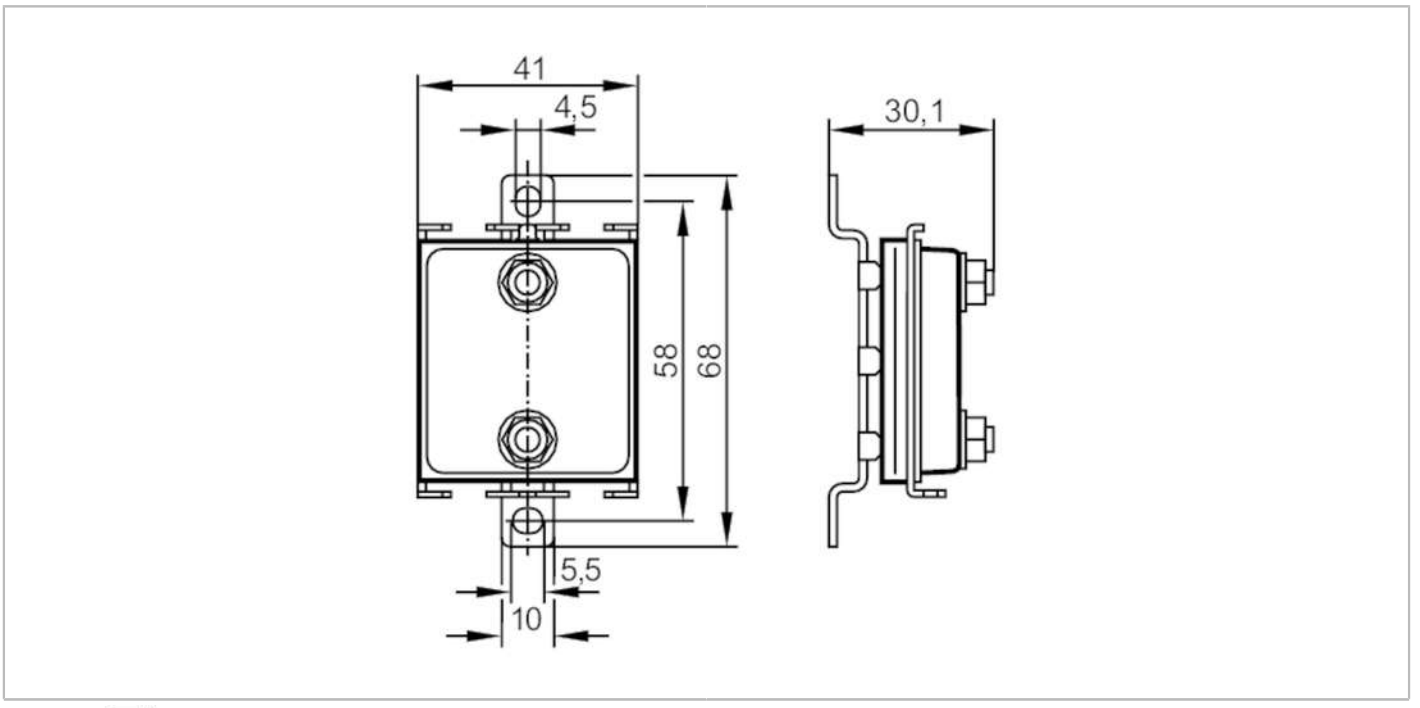

Application		
Application		for the distribution of the AS-i voltage or the external 24 V supply
Electrical data		
Protection class		III
Max. current load total	[A]	8
Outputs		
Electrical design		AS-i
Operating conditions		
Ambient temperature	[°C]	0...60
Note on ambient temperature		-15...60 °C: only in connection with an EPDM cable
Max. relative air humidity	[%]	80; (31 °C; linearly decreasing to 50 % (40 °C))
Max. height above sea level	[m]	2000
Protection		IP 67; (when used outside the hazardous area: IP 68 / IP 69K)
Pollution degree		2
Tests / approvals		
ATEX marking		II 3G Ex ec IIC T6 Gc X
		II 3D Ex tc IIIC T 70°C Dc X
Mechanical data		
Weight	[g]	132.5
Materials		metal parts: stainless steel (316L/1.4404); rubber gasket for contact pins: FKM; Sealing: EPDM
Tightening torque	[Nm]	2.5; (Mounting screw)

E7377A

AS-Interface flat cable splitter

FC Splitter ye/ye II 3D/3G

Accessories	
Accessories (optional)	Torque wrench:, E70390
	flat cable blank:, E70299

Remarks	
Pack quantity	1 pcs.