# E11991

## Jumper cable with valve plug

AVDAA031PLS0010H03

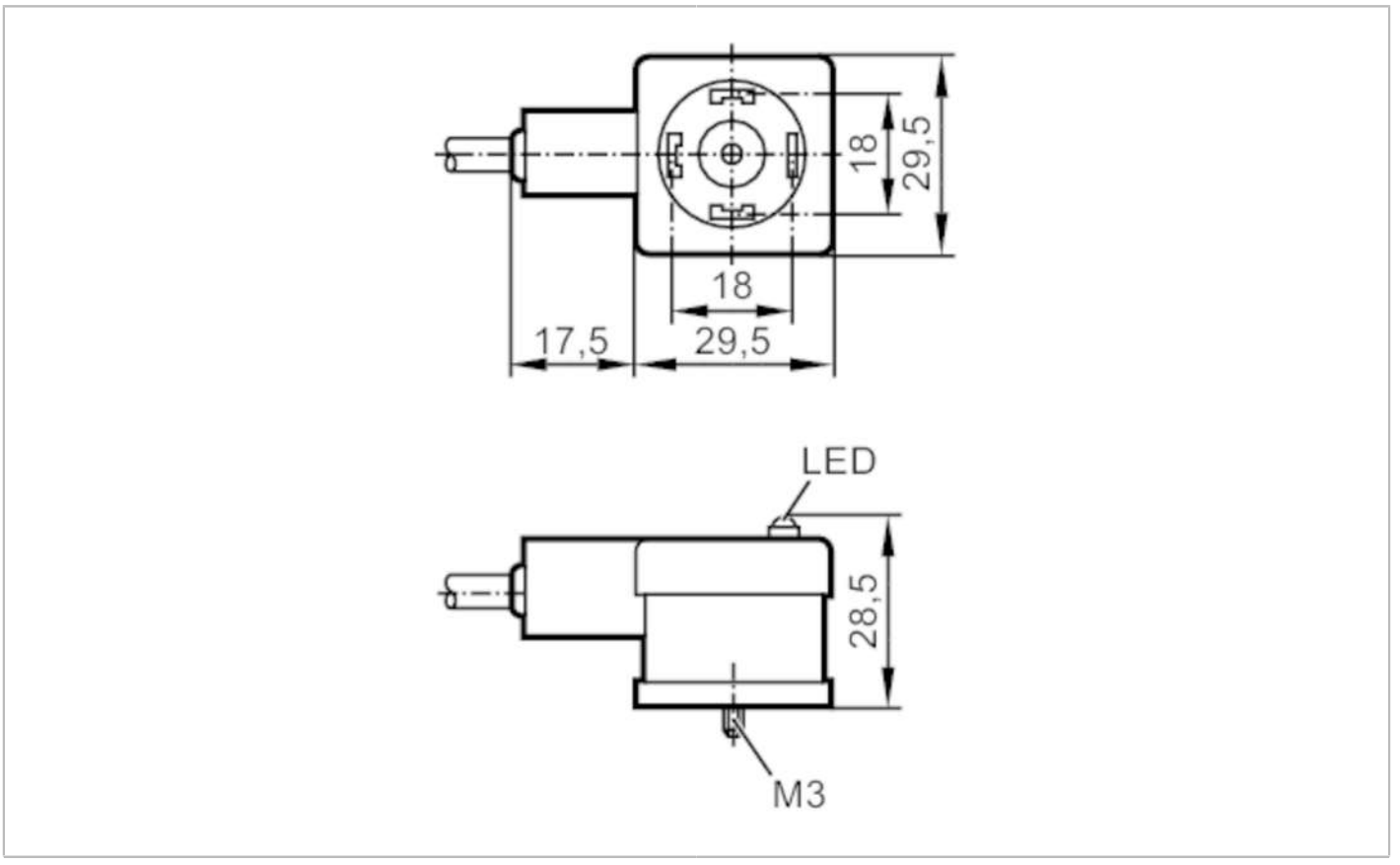


| | | | |
|---|---|---|---|
| **Application** | | | |
| Special feature | | | Free from silicone; Halogen-free |
| Free from silicone | | | yes |
| **Electrical data** | | | |
| Operating voltage | [V] | | < 24 AC/DC |
| Overvoltage protection | | | yes;  (VDR) |
| Max. current load total | [A] | | 5 |
| **Operating conditions** | | | |
| Ambient temperature | [°C] | | -20...80 |
| Protection | | | IP 67 |
| **Mechanical data** | | | |
| Weight | [g] | | 491.5 |
| Dimensions | [mm] | | 28.5 x 29.5 x 47 |
| Materials | | | PP; FKM |
| Moulded-body material | | | PP / FPM |
| **Displays / operating elements** | | | |
| Display | | switching status | 1 x LED, yellow |
| **Remarks** | | | |
| Pack quantity | | | 1 pcs. |

# E11991

## Jumper cable with valve plug

AVDAA031PLS0010H03

### Electrical connection

Cable: 10 m, PUR, Halogen-free, Ø 6.6 mm; 3 x 0.5 mm² / AWG 20

### Electrical connection - socket

Connector: 1 x valve type A DIN, angled; Moulded body: PP / FPM




### Connection

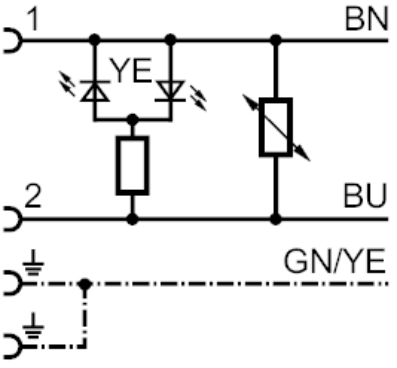


| | Core colours : |
|---|---|
| BN = | brown |
| BU = | blue |
| GN/YE = | green/yellow |