MSM LA 22

Metal Switch, Latching Action, Switching Voltage up to 125 VDC / 250 VAC



MSM 22 LA PI red



MSM LA 22 RI green

Description

- Switch available in version: Standard (ST), with Lettering (LE), with Point Illumination (PI), with Ring Illumination (RI)
- Assembly by mounting with nut and subsequent clipping of the switching element
- Equipped with flat-pin plugs to permit fast connection

Standards

- DIN EN 61058-1
- UL 1054

Approvals

- Low Voltage Directive 2006/95/EC Low Voltage Directive 2006/95/EC
- KEMA / ENEC File Number (Marquardt): 2106068.01
- UL / CSA File Number (Marquardt): E41791

Characteristics

- Housing and actuator material: high-quality stainless steel
- Variety of design options regarding size, colour, illumination, connection or lettering
- Switching voltage up to 125 VDC respectively 250 VAC, switching current up to 12 A
- optional with point or ring illumination
- available with single-pole and double-pole switching system, switching status is easy to discern by looking at or feeling the resting position of the actuator
- for use in harsh environments

References

Alternative: Standard version MSM 22
Alternative: double-pole switch: MSM DP 22
Alternative: switch with backlighted illumination: MSM CS 22

Weblinks

html-datasheet, General Product Information, CE declaration of conformity, RoHS, CHINA-RoHS, e-Shop, CAD-Drawings, Product News, Detailed request for product

Technical Data

Switching Function	N.O.
Number of Poles	1 pole and 2 pole
Supply Voltage	24 VDC Ring Illumination, Point Illumination without series resistor, LED operating data are listed in a separate table
Surge Strength	4 kV MSM ST / MSM LE
Switching Voltage	max. 250 VAC 30 VDC (125 VDC at 0.5 A),
Switching Current	max. 12 A AC
Rated Switching Capacity	3000 W
Lifetime	0.05 million actuations (250 VAC / 8 A), 0.1 million actuations (125 VDC / 0.5 A)
Contact Resistance	< 100 mΩ (12 VDC / 1 A)
Insulation Resistance	> 100 MΩ 500 VDC
Actuating Force	10 N
Actuating Travel	5.2 mm,
Lifetime	0.1 million actuations
Contact Gap	3 mm
Shock Protection	IK 07
Tightening Torque Plastic Nut	4.5 Nm for thread M19, 3.5 Nm for M22
Tightening Torque Stainless Steel Nut	12 Nm for thread M19, 16 Nm for M22

Operating Temperature	-20 to +85 °C
Storage Temperature	-20 to +85 °C
IP-Protection	IP 64 Front Side Contact Area, IP 40 Front Side mechanical, IP 00 Rear Side
Salt Spray Test (acc. to DIN 50021-SS)	24 h / 48 h / 96 h Residence Time
Housing	Stainless Steel
Actuator (disc, outside housing)	Stainless Steel
Illuminated Ring (die-casting, inside housing)	PC
Gasket	NBR70
Switcher Collet	PA66 (UL94-V0 related to d ≥ 1.6 mm)
Intermediate Connector	PA66 (UL94-V0 related to d ≥ 1.6 mm)
Contact Pin Adapter	PA66 (UL94-V0 related to d ≥ 1.6 mm)

Dimension

MSM 22 LA ST / LE double-pole

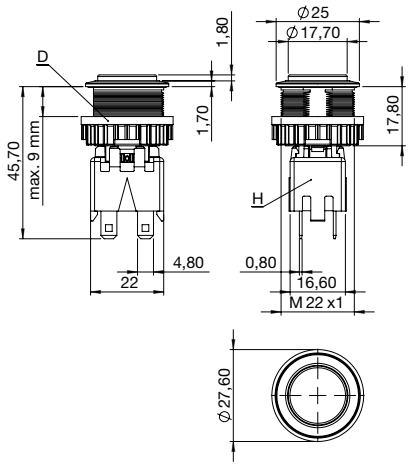

MSM 22 LA PI double-pole

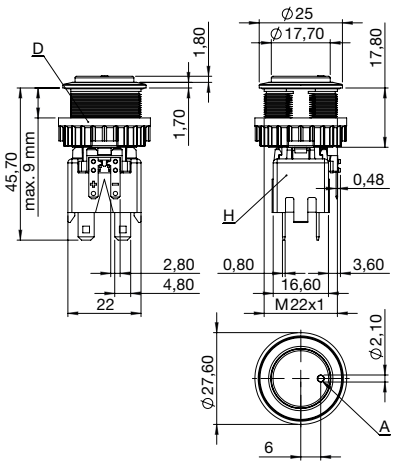

MSM 22 LA RI double-pole

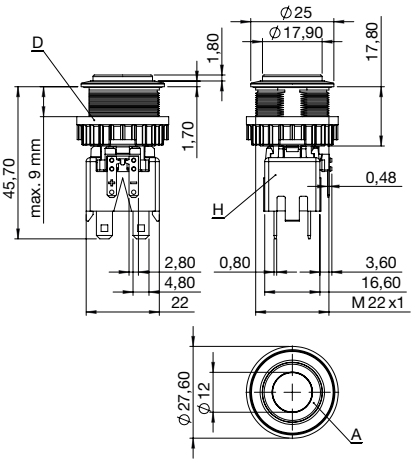

Switching Element single-pole with Push Button Holder

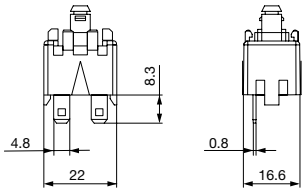

Legend
A = Illumination Area
C = Width Across Flats
D = Nut
H = Switching Element

Dimension

MSM 22 LA ST / MSM 22 LA RI

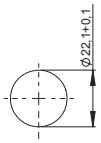

Drilling diagram

MSM 22 LA LE / MSM 22 LA PI / MSM 22 LA RI optional

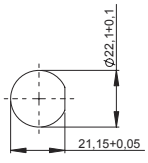

Drilling diagram

Assembly Instructions

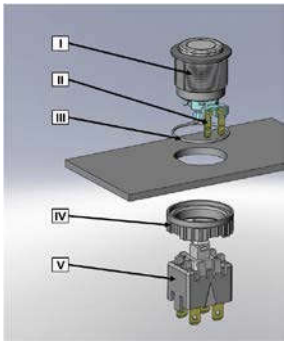

I Housing
II Flat Pin Terminal (Illumination)
III Gasket
IV Nut (Nut type see Dimensions)
V Module Switching Contact

Installation Instruction:
1.) Place the gasket accurately on the actuator housing. Then mount the actuator housing assembly into the panel.
2.) Tighten the screw nut according to the torque instructions.
3.) Clasp the module switching contact into the actuator housing.

Installation information:
1.) The power supply and the configuration of the flat pin terminals have to be installed correctly for the illumination and micro switch function.
2.) Insulate the terminals as required. Fully insulated plug-in sleeves are recommended.
3.) Installation instructions according to VDE-standard DIN VDE 0100-100 or alternatively IEC 60354 standard

Diagrams

MSM LA ST / LE single-pole

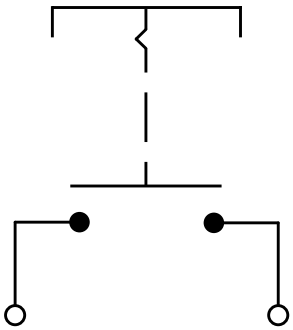

MSM LA ST / LE double-pole

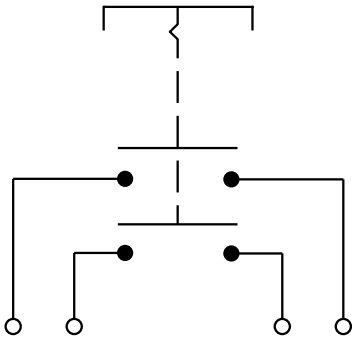

MSM LA PI single-pole

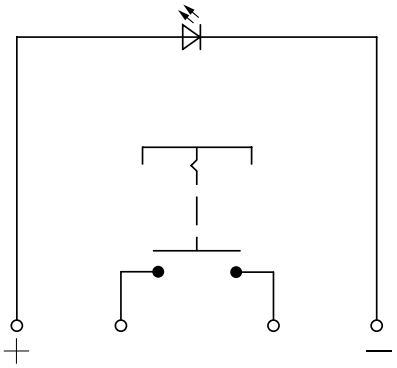

MSM LA PI double-pole

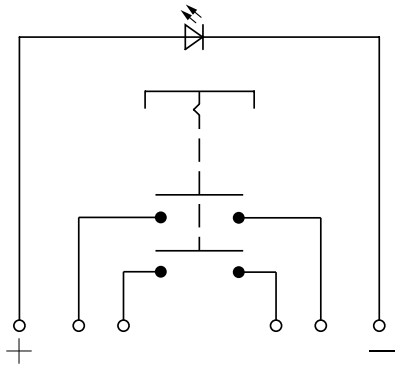

MSM LA RI single-pole

MSM LA RI double-pole

Contact Layout single-pole

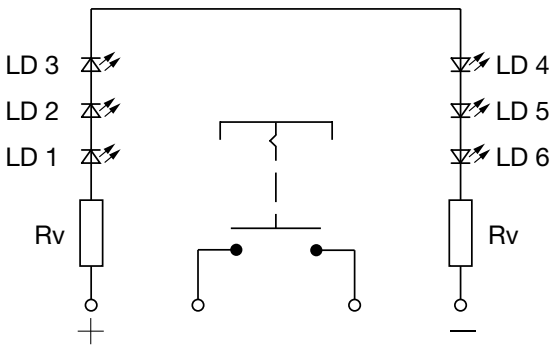

Contact Layout double-pole

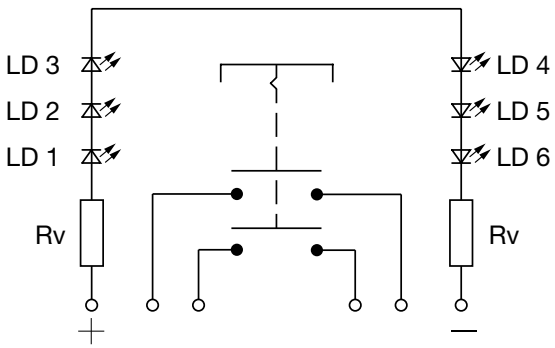

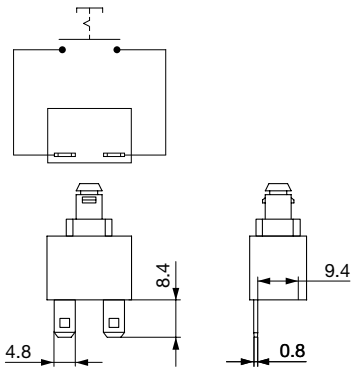

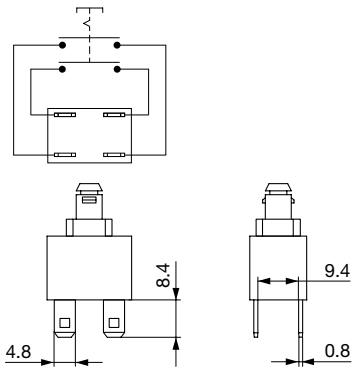

Point Illumination

Operating Data	Forward Current max.	Forward Current at 10 mA	Forward Current at 8 mA	Forward Current max.
LED red	30 mA	1,9 VDC		3,0 VDC
LED green	30 mA	2,1 VDC		3,0 VDC
LED blue	20 mA		3,7 VDC	4,5 VDC
Attention: Switches are delivered without series resistor.				

Lettering

The last three digits in the order number define the lettering:	
000	No Lettering
001-074	Standard Lettering
101-	Customized Lettering

Lettering Colour of Laser Lettering

Material	Lettering Colour	
Stainless Steel	black	Filled letters
For further Lettering details see also weblink:		
General Product Information		

Order Index Lettering

Laser Marking			
001 = **A**	021 = **U**	041 = ÷	061 = **EIN**
002 = **B**	022 = **V**	042 = ✳	062 = **AUS**
003 = **C**	023 = **W**	043 = **=**	063 = **AUF**
004 = **D**	024 = **X**	044 = #	064 = **AB**
005 = **E**	025 = **Y**	045 = ↔	065 = **ON**
006 = **F**	026 = **Z**	046 = ↕	066 = **OFF**
007 = **G**	027 = **0**	047 = →	067 = **UP**
008 = **H**	028 = **1**	048 = ←	068 = **DOWN**
009 = **I**	029 = **2**	049 = ↓	069 = **HIGH**
010 = **J**	030 = **3**	050 = ↑	070 = **LOW**
011 = **K**	031 = **4**	051 = %	071 = **ON/OFF**
012 = **L**	032 = **5**	052 = √	072 = **START**
013 = **M**	033 = **6**	053 = **CTRL**	073 = **RESET**
014 = **N**	034 = **7**	054 = **RETURN**	074 = ⏻
015 = **O**	035 = **8**	055 = **SHIFT**	075 = 💡
016 = **P**	036 = **9**	056 = **LOCK**	076 = 🔔
017 = **Q**	037 = **+**	057 = **STOP**	
018 = **R**	038 = **-**	058 = **ENTER**	
019 = **S**	039 = **.**	059 = **BACK**	
020 = **T**	040 = x	060 = **LINE**	

All Variants

Diameter	Number of Poles	Illumination, LED	Torsion Protection	Config. Code	Order Number	
[mm]						
22	1 pole	non-illuminated	yes	MSM 22 LA ST	1241.6831.1110000	▮
22	1 pole	Point Illumination, red	yes	MSM 22 LA PI red	1241.6833.1111000	
22	1 pole	Point Illumination, green	yes	MSM 22 LA PI green	1241.6833.1112000	
22	1 pole	Point Illumination, blue	yes	MSM 22 LA PI blue	1241.6833.1114000	
22	1 pole	Ring Illumination, red, 24 VDC	yes	MSM 22 LA RI red	1241.6834.1111000	▮
22	1 pole	Ring Illumination, green, 24 VDC	yes	MSM 22 LA RI green	1241.6834.1112000	▮
22	1 pole	Ring Illumination, blue, 24 VDC	yes	MSM 22 LA RI blue	1241.6834.1114000	▮
22	2 pole	non-illuminated	yes	MSM 22 LA ST	1241.6831.1120000	▮
22	2 pole	Point Illumination, red	yes	MSM 22 LA PI red	1241.6833.1121000	▮
22	2 pole	Point Illumination, green	yes	MSM 22 LA PI green	1241.6833.1122000	
22	2 pole	Point Illumination, blue	yes	MSM 22 LA PI blue	1241.6833.1124000	▮
22	2 pole	Ring Illumination, red, 24 VDC	yes	MSM 22 LA RI red	1241.6834.1121000	▮
22	2 pole	Ring Illumination, green, 24 VDC	yes	MSM 22 LA RI green	1241.6834.1122000	▮
22	2 pole	Ring Illumination, blue, 24 VDC	yes	MSM 22 LA RI blue	1241.6834.1124000	▮

Legend:
Type: MSM
CS = Ceramic Surface
ST = Standard: not lettered
LE = Lettering: lettered
AI = BL = Full Surface Backlighting: Lettering possilbe (see Lettering, last 3 digits)

Customer-specific versions available on request.
Special materials for use in salt and chlorinated environment on request.

The nut with gasket and micro switch are enclosed in the box.

▮ Most Popular.

Availability for all products can be searched real-time:http://www.schurter.com/en/Stock-Check/Stock-Check-SCHURTER

Packaging unit 10 in box with insert



- Actuating elements in ESD safe packaging
- Screw nuts and sealing rings in a bag (enclosd in the box)
- Micro switches in a bag (enclosed in the box)

02.02.2015

The specifications, descriptions and illustrations indicated in this document are based on current information. All content is subject to modifications and amendments. Information furnished is believed to be accurate and reliable. However, users should independently evaluate the suitability and test each product selected for their own applications.