W2E250-HP06-01

AC axial compact fan

sickled blades (S series)

ebm-papst Mulfingen GmbH & Co. KG
Bachmühle 2 · D-74673 Mulfingen
Phone +49 7938 81-0
Fax +49 7938 81-110
info1@de.ebmpapst.com
www.ebmpapst.com

Limited partnership · Headquarters Mulfingen
County court Stuttgart · HRA 590344

General partner Elektrobau Mulfingen GmbH · Headquarters Mulfingen
County court Stuttgart · HRB 590142

Nominal data

Type	**W2E250-HP06-01**
Motor	**M2E068-CF**

Phase		1~	1~	1~
Nominal voltage	VAC	230	230	230
Frequency	Hz	50	60	60
Type of data definition		ml	ml	ml
Valid for approval / standard		CE	CE	UL 2111
Speed (rpm)	min^{-1}	2320	2300	2300
Power input	W	125	160	166
Current draw	A	0.55	0.71	0.74
Motor capacitor	µF	3	3	3
Capacitor voltage	VDB	400	400	400
Capacitor standard		S0 (CE)	S0 (CE)	S0 (CE)
Max. back pressure	Pa	100	110	110
Min. ambient temperature	°C	-25	-25	-25
Max. ambient temperature	°C	60	50	50
Starting current	A	0.83	0.81	0.81

ml = Max. load · me = Max. efficiency · fa = Running at free air · cs = Customer specs · cu = Customer unit
Subject to alterations

AC axial compact fan

sickled blades (S series)

Technical features

Mass	2.7 kg
Size	250 mm
Motor size	68
Surface of rotor	Coated in black
Material of blades	PP plastic
Housing material	Die-cast aluminium
Number of blades	7
Direction of air flow	V
Direction of rotation	Counter-clockwise, seen on rotor
Type of protection	IP44; Depending on installation and position
Insulation class	"F"
Humidity (F) / environmental protection class (H)	H0 - dry environment
Max. permissible ambient motor temp. (transp./ storage)	+ 80 °C
Min. permissible ambient motor temp. (transp./storage)	- 40 °C
Mounting position	Any
Condensation drainage holes	None
Operation mode	S1
Motor bearing	Ball bearing
Touch current acc. IEC 60990 (measuring network Fig. 4, TN system)	< 0.75 mA
Electrical connection	Via terminal strip, capacitor connected
Motor protection	Thermal overload protector (TOP) wired internally
Cable exit	Variable
Protection class	I (if protective earth is connected by customer)
Motor capacitor according to EN 60252-1 in safety protection class	S0
Product conforming to standard	EN 60335-1; CE
Approval	CCC; EAC; CSA C22.2 no. 77; UL 1004-3

ebm-papst Mulfingen GmbH & Co. KG · Bachmühle 2 · D-74673 Mulfingen · Phone +49 (0) 7938 81-0 · Fax +49 (0) 7938 81-110 · info1@de.ebmpapst.com · www.ebmpapst.com

AC axial compact fan

sickled blades (S series)

Product drawing

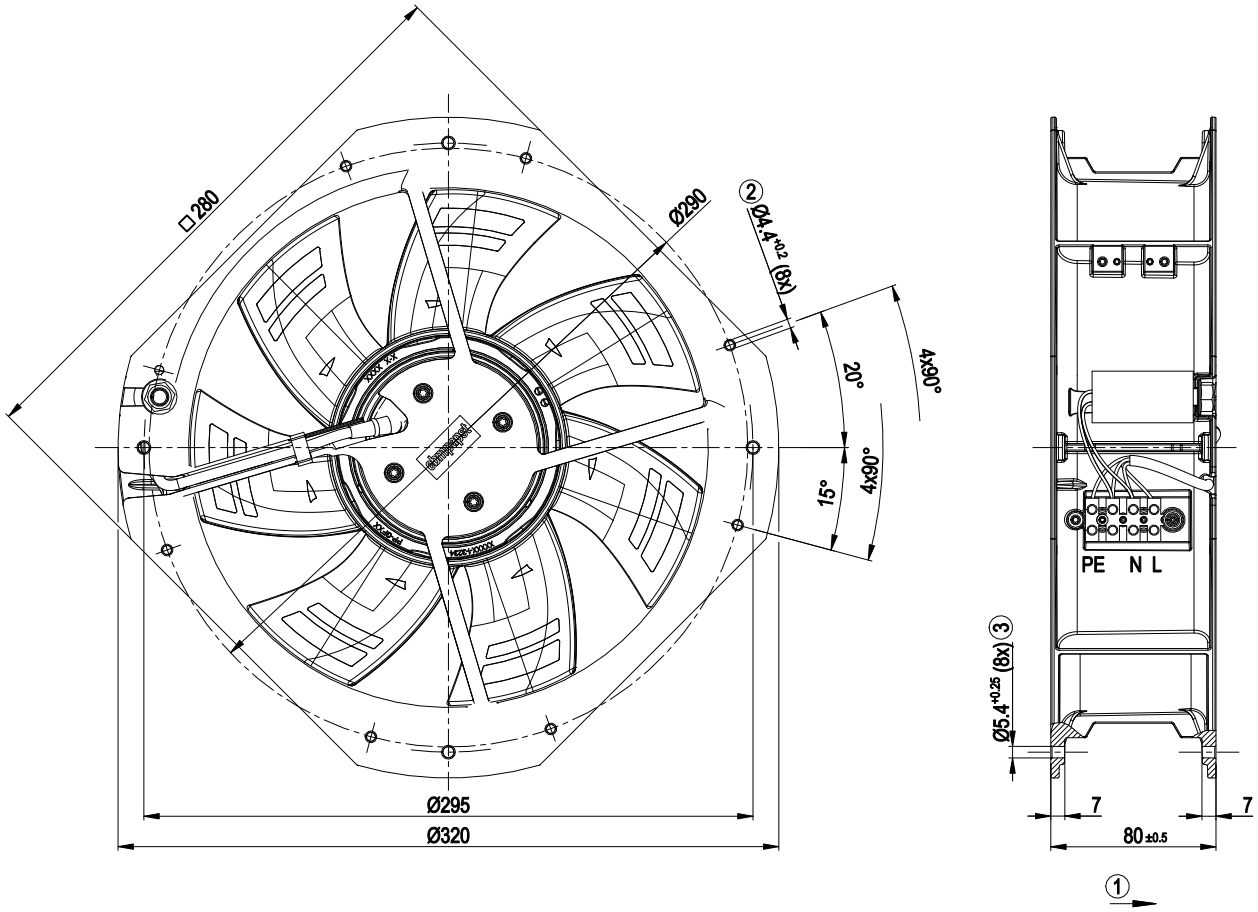

1	Direction of air flow "V"
2	For self-tapping M5 screws
3	For self-tapping M6 screws

Connection screen

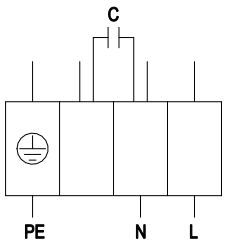

PE	green/yellow	N	black	L	blue

ebm-papst Mulfingen GmbH & Co. KG · Bachmühle 2 · D-74673 Mulfingen · Phone +49 (0) 7938 81-0 · Fax +49 (0) 7938 81-110 · info1@de.ebmpapst.com · www.ebmpapst.com

AC axial compact fan

sickled blades (S series)

Charts: Air flow 50 Hz

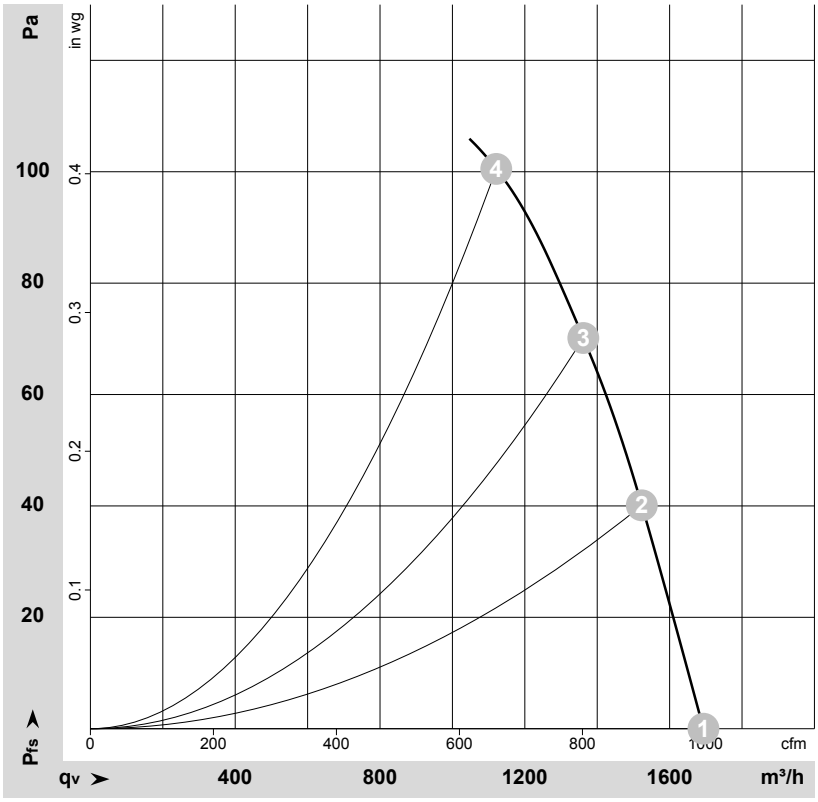

ρ = 1.15 kg/m³ ± 2 %

Measurement: LU-162612-1

Air performance measured as per ISO 5801 Installation category A. For detailed information on the measuring set-up, please contact ebm-papst. Suction-side noise levels: LwA measured as per ISO 13347 / LpA measured with 1m distance to fan axis. The values given are valid under the measuring conditions mentioned above and may vary according to the actual installation situation. With any deviation from the standard set-up, the specific values have to be checked and reviewed with the unit installed.

Measured values

	U	f	n	P_e	I	LpA_{in}	LwA_{in}	q_V	p_{fs}	q_V	p_{fs}
	V	Hz	min^{-1}	W	A	dB(A)	dB(A)	m^3/h	Pa	cfm	in. wg
1	230	50	2550	101	0.44	63	70	1695	0	995	0.00
2	230	50	2475	109	0.48	62	69	1525	40	895	0.16
3	230	50	2405	115	0.50	61	68	1360	70	800	0.28
4	230	50	2320	125	0.55	62	69	1120	100	660	0.40

U = Supply voltage · f = Frequency · n = Speed (rpm) · P_e = Power input · I = Current draw · LpA_{in} = Sound pressure level inlet side · LwA_{in} = Sound power level inlet side · q_V = Air flow
p_{fs} = Pressure increase

ebm-papst Mulfingen GmbH & Co. KG · Bachmühle 2 · D-74673 Mulfingen · Phone +49 (0) 7938 81-0 · Fax +49 (0) 7938 81-110 · info1@de.ebmpapst.com · www.ebmpapst.com

AC axial compact fan

sickled blades (S series)

Charts: Air flow 60 Hz

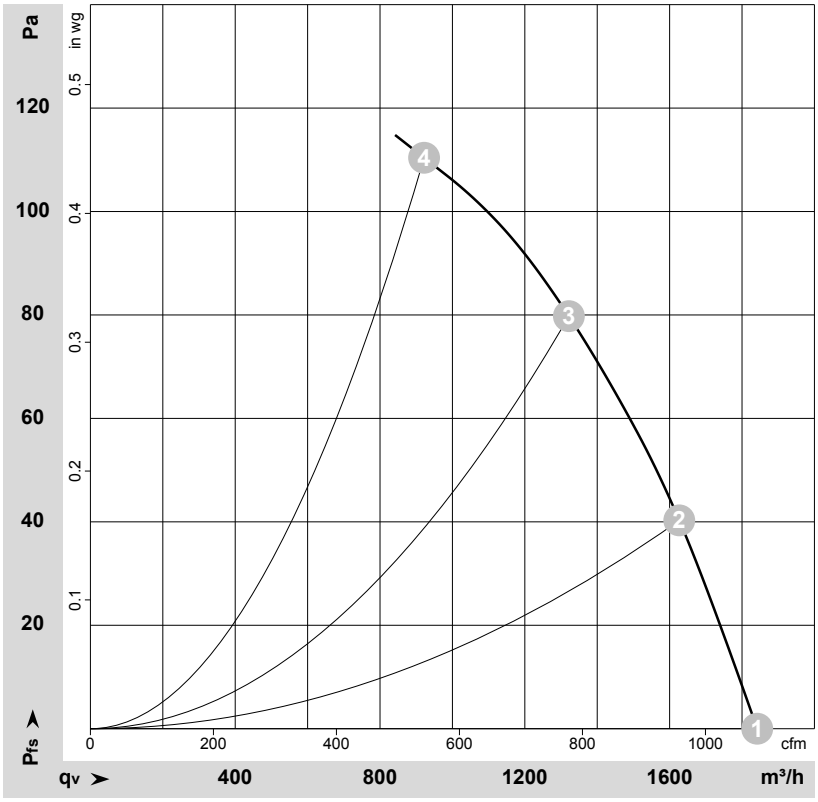

ρ = 1.15 kg/m³ ± 2 %

Measurement: LU-163044-1

Air performance measured as per ISO 5801 Installation category A. For detailed information on the measuring set-up, please contact ebm-papst. Suction-side noise levels: LwA measured as per ISO 13347 / LpA measured with 1m distance to fan axis. The values given are valid under the measuring conditions mentioned above and may vary according to the actual installation situation. With any deviation from the standard set-up, the specific values have to be checked and reviewed with the unit installed.

Measured values

	U	f	n	P_e	I	LpA_{in}	LwA_{in}	q_V	p_{fs}	q_V	p_{fs}
	V	Hz	min^{-1}	W	A	dB(A)	dB(A)	m^3/h	Pa	cfm	in. wg
1	230	60	2750	134	0.59	64	71	1840	0	1085	0.00
2	230	60	2595	145	0.63	63	70	1625	40	960	0.16
3	230	60	2400	153	0.66	62	68	1320	80	780	0.32
4	230	60	2300	160	0.71	66	74	920	110	545	0.44

U = Supply voltage · f = Frequency · n = Speed (rpm) · P_e = Power input · I = Current draw · LpA_{in} = Sound pressure level inlet side · LwA_{in} = Sound power level inlet side · q_V = Air flow
p_{fs} = Pressure increase

ebm-papst Mulfingen GmbH & Co. KG · Bachmühle 2 · D-74673 Mulfingen · Phone +49 (0) 7938 81-0 · Fax +49 (0) 7938 81-110 · info1@de.ebmpapst.com · www.ebmpapst.com