Brand of NTN corporation

Technical data

UCFCE206

Bearing units



Grey cast housing, radial insert ball bearing with socket set screws,seal with slinger

KIT CONTENT

UC206G2, FCE206

VISUAL (S)

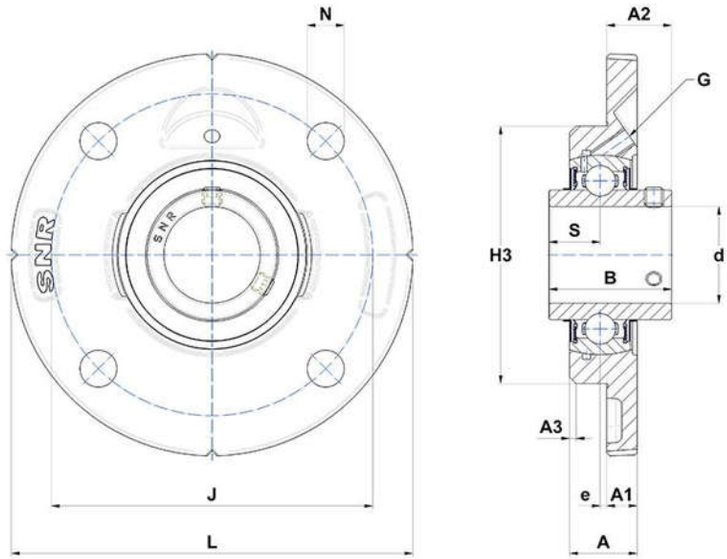

PRODUCT DEFINITION

Brand	SNR
A - Housing height	21 mm
A1 - Housing foot height / flange height	9,5 mm
A2 - Total height from mounting surface	20,2 mm
A3 - Centering depth / chamfer dimension	2 mm
B - Width of Inner Ring	38,1 mm

NTN Europe
1 rue des Usines · BP 2017 · 74010 Annecy Cedex · France · Tel. +33 (0)4 50 65 30 00
S.A. au capital de 322 639 919 € · RCS ANNECY B 325 821 072 · Id. Fiscale : FR 48 325 821 072
SIRET 325 821 072 00015 · Code APE 2815 Z · Code NACE 28.15

PRODUCT DEFINITION	
d - Shaft diameter	30 mm
e - Distance mounting surface to bearing center	-2 mm
G - Grease fitting	M6x1
H3 - Centering dia	80 mm
J - Mounting holes distance	100 mm
L - Housing width / diameter	125 mm
N - Mounting hole dimension	11,5 mm
S - Distance front side/bearing centre	15,9 mm

PRODUCT PERFORMANCE	
C - Dynamic load rating	19500000 mN
C0 - Static load rating	11200000 mN
Operating temperature min.	253,15 °K
Operating temperature max.	373,15 °K

OTHER FEATURES	
Mass	0,99 kg
Recommended tightening torque for set screw	5.5 N-m