Shock-Safe Fuseholder, 5 x 20 mm, Slotted Cap/Fingergrip, IP 40 / IP 67, IEC 60335-1





Fingergrip

250 VAC · 2.5 W / 10 A (VDE) · 400 VAC · 16 A (UL/CSA)

Description
- Compact design
- Heading with fingergrip and slotted available
- Degree of protection IP 67 available

Standards
- IEC 60127-6
- UL 4248-1
- CSA 22.2 no. 4248-1

Approvals
- Approval Reference Type: FPG1
- VDE Certificate Number: 127216
- UL File Number: E39328

Applications
- Industrial electronic
- Household appliances
- Medical equipment

Weblinks
pdf-datasheet, html-datasheet, General Product Information, Approvals, CE declaration of conformity, RoHS, CHINA-RoHS, REACH, e-Shop, SCHURTER-Stock-Check, Distributor-Stock-Check, Detailed request for product

Technical Data

Shock-Safe Category	PC2
Fuse-Link	5 x 20 mm
Mounting	Panel Mount, Front Side
Mounting	Fixing Nut
Terminal	Solder or Quick-Connect 4.8 x 0.5 mm
Rated Voltage	250 VAC (VDE), 400 VAC (UL/CSA)
Rated current	6.3/10 A (VDE), 16 A (UL/CSA)
Rated Power Acceptance IEC	2.5 W / 10 A @ Ta 23 °C Admissible power acceptance at higher ambient temperature see derating curves
Degree of Protection	IP 40 / IP 67
Protection Class	Suitable for appliances with protection class I acc. to IEC 61140
Admissible Ambient Air Temp.	-40 °C to 85 °C
Climatic Category	40/085/21 acc. to IEC 60068-1
Material: Socket	Thermoplastic, black, UL 94V-0
Material: Terminals	Tin-Plated Copper Alloy
Unit Weight	5.7 g
Storage Conditions	0 °C to 60 °C, max. 70% r.h.
Product Marking	⊟, Type, Rated voltage, Rated current, Power Rating, Approvals

Soldering Methods	Iron
Solderability	350 °C / 3 sec acc. to IEC 60068-2-20, Test Ta, method 2
Resistance to Soldering Heat	350 °C / 10 sec acc. to IEC 60068-2-20, Test Tb, method 2
Contact Resistance	≤ 10 mΩ at 20 mV acc. to IEC 60127-6
Dielectric Strength	> 3 kV between Life parts (50 Hz; 1 min)
Impulse Withstand Voltage	> 4 kV between Life parts
Insulation Resistance	≥ 10 MΩ between Life parts (500 VDC; 1 min)
Overvoltage Category	I - III acc. to IEC 60664-1
Pollution Degree	3 acc. to IEC 60664-1
Resistance to Vibration	acc. to IEC 60068-2-6, test Fc
Admissible Torque on Fixing Nut	max 1.2 Nm
Panel Thickness s	max 6 mm

Dimension

41.5 mm

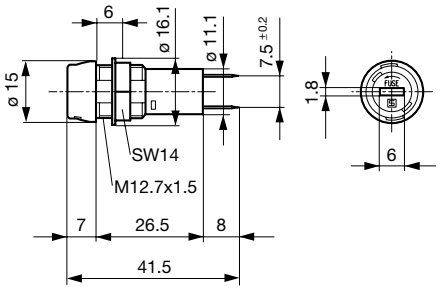

IP40 / Variants 3101.0010 and 3101.0210

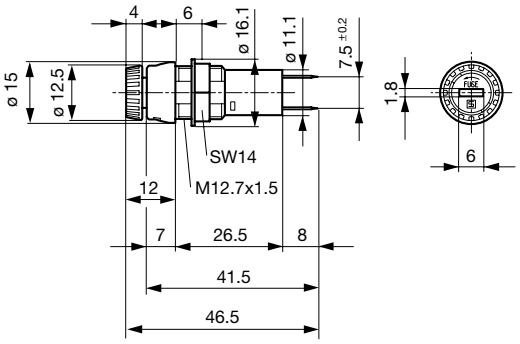

IP40 / Variants Fingergrip 3101.0015 and 3101.0215

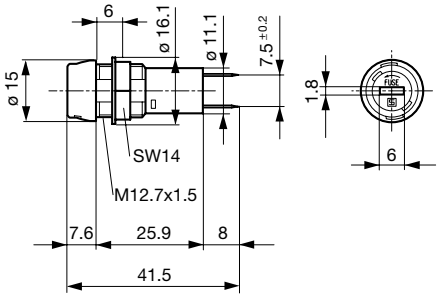

IP67 / Variants 3101.0110 and 3101.0310

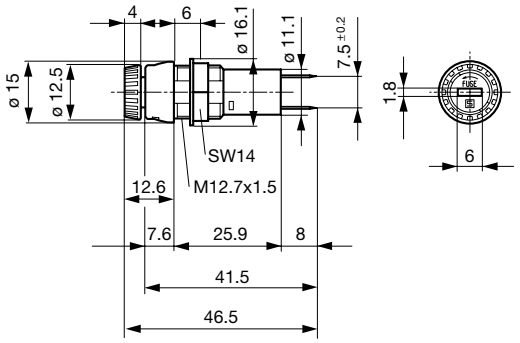

IP67 / Variants Fingergrip 3101.0115 and 3101.0315

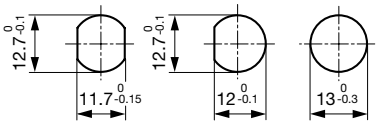

Mounting Holes

Derating Curves

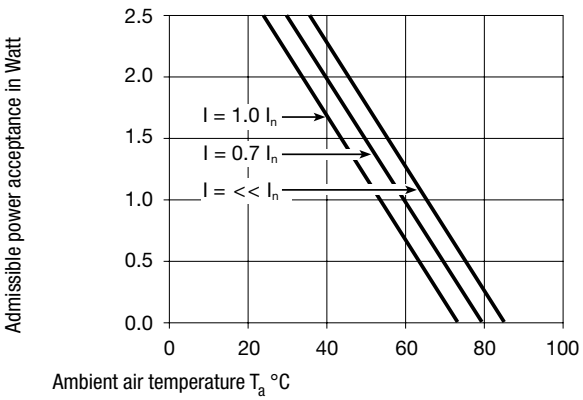

All Variants

Holder	Cap	Terminal	Degree of Protection	Material	Remark	Order Number	
●	slotted	Solder	IP 40	Thermoplastic	-	3101.0010	▮
●	slotted	Solder	IP 40	Spec. Thermoplastic 1	-	3101.0010.15	
●	slotted	Quick-Connect 4.8 x 0.5 mm	IP 40	Thermoplastic	-	3101.0210	
●	slotted	Quick-Connect 4.8 x 0.5 mm	IP 40	Spec. Thermoplastic 1	-	3101.0210.15	
●	Fingergrip	Solder	IP 40	Thermoplastic	-	3101.0015	▮
●	Fingergrip	Solder	IP 40	Spec. Thermoplastic 1	-	3101.0015.15	
●	Fingergrip	Quick-Connect 4.8 x 0.5 mm	IP 40	Thermoplastic	-	3101.0215	▮
●	Fingergrip	Quick-Connect 4.8 x 0.5 mm	IP 40	Spec. Thermoplastic 1	-	3101.0215.15	
●	slotted	Solder	IP 67	Thermoplastic	-	3101.0110	▮
●	slotted	Solder	IP 67	Spec. Thermoplastic 1	-	3101.0110.15	
●	slotted	Quick-Connect 4.8 x 0.5 mm	IP 67	Thermoplastic	-	3101.0310	
●	slotted	Quick-Connect 4.8 x 0.5 mm	IP 67	Spec. Thermoplastic 1	-	3101.0310.15	
●	Fingergrip	Solder	IP 67	Thermoplastic	-	3101.0115	▮
●	Fingergrip	Solder	IP 67	Spec. Thermoplastic 1	-	3101.0115.15	
●	Fingergrip	Quick-Connect 4.8 x 0.5 mm	IP 67	Thermoplastic	-	3101.0315	
●	Fingergrip	Quick-Connect 4.8 x 0.5 mm	IP 67	Spec. Thermoplastic 1	-	3101.0315.15	

▮ Most Popular.

Availability for all products can be searched real-time:http://www.schurter.com/en/Stock-Check/Stock-Check-SCHURTER

Spec. thermoplastic meets the new requirements of IEC 60335-1 for appliances in unattended use (clause 30.2.3). This standard includes the enhanced requirements of glow wire tests acc. to IEC 60695-2-12 and -13.

White and grey colours available on request

Packaging Unit Bulk 186 x 91 x 91 mm (100 pcs.)

01.05.2015

The specifications, descriptions and illustrations indicated in this document are based on current information. All content is subject to modifications and amendments. Information furnished is believed to be accurate and reliable. However, users should independently evaluate the suitability and test each product selected for their own applications.