PRODUCT DETAILS

ARTICLE: 35506

WHEEL AS 100X40/40 INOX RB SWIV X40L/50 INOX FORK



Wheel series AS

Wheels with cast soft polyurethane coating 87 Sh.A on polyamide 6 center.
Wheel fitted with stainless steel roller bearing.

Castor series INOX40

Inox 40 series, polished stainless steel forks, swivels assemblies with double races & 'water resistant' protections. Finish: polished.

Technical data

Wheel diameter	D	100 mm
Tyre width	E	40,0 mm
Bore diameter	d	15 mm
Weight article		1,280 kg
Hub width	L	40 mm
Overall height	H	137 mm
Top plate outer dimensions	AxB	105x85 mm
Bolt hole spacing	axb	76x55 mm
Bolt hole spacing	axb	80x60 mm
Fixing bolt diameter	g	M8
Offset	F	42 mm
Fork width	U	50 mm
Load Capacity		250 kg

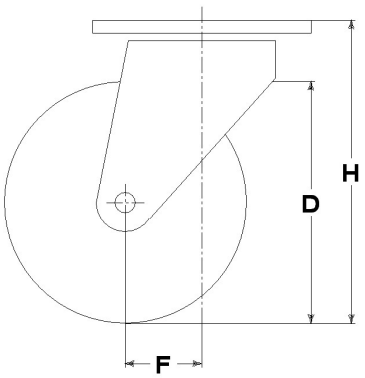

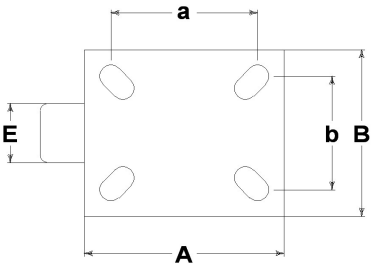

Related Articles

Spare part wheel: 35058X
Version with trailing brake: 35506FR

GENERAL INFORMATION / RECOMMENDATIONS AND WARNINGS
The cited text and the complete catalogue in their most up-dated versions are available in the OEM's website page www.lagspa.it/downloads. The dimensions, descriptions, specifications and illustrations herein are indicative and subject to variations without notice. The fact that products are illustrated herein does not necessarily imply they are available from stock nor does it place us under any obligation to supply them.
Tests carried out refer to the original products with original accessories: the replacement of one of the components with others of different manufacture might prevent the same results from being achieved and will automatically invalidate any guarantee. Please contact our technical service concerning any special application.