NU 2310 ECP

Popular item
SKF Explorer

Dimensions

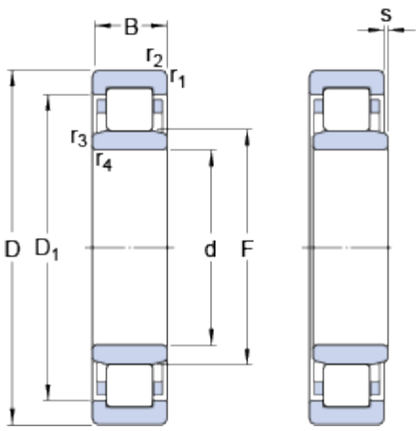

d		50	mm
D		110	mm
B		40	mm
D_1	≈	91.4	mm
F		65	mm
$r_{1,2}$	min.	2	mm
$r_{3,4}$	min.	2	mm
s	max.	3.4	mm

Abutment dimensions

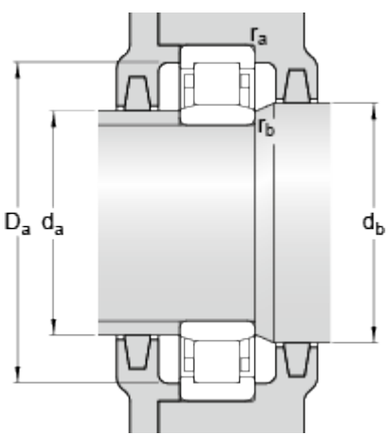

d_a	min.	60	mm
d_a	max.	63	mm
d_b	min.	67	mm
D_a	max.	99.6	mm
r_a	max.	2	mm
r_b	max.	2	mm

Calculation data

Basic dynamic load rating	C	186	kN
Basic static load rating	C_0	186	kN
Fatigue load limit	P_u	24.5	kN
Reference speed		6700	r/min
Limiting speed		8000	r/min
Calculation factor	k_r	0.25	
Limiting value	e	0.3	
Axial load factor	Y	0.4	

Mass

Mass bearing	1.73	kg