rotronic

Datenblatt - Fiche technique - Data sheet

11.04.5568



ROLINE HDMI High Speed Kabel mit Ethernet, HDMI ST – Mini HDMI ST, 0,8m

ROLINE Câble HDMI High Speed avec Ethernet, HDMI M – Mini HDMI M, 0,8m

ROLINE HDMI High Speed Cable with Ethernet, HDMI Type A M – HDMI Type C M, 0,8 m

DATE	REV.	REVISION	DRAFTING	CHECKED
2013.07.26	A0	NEW	CAIWEI	CGW

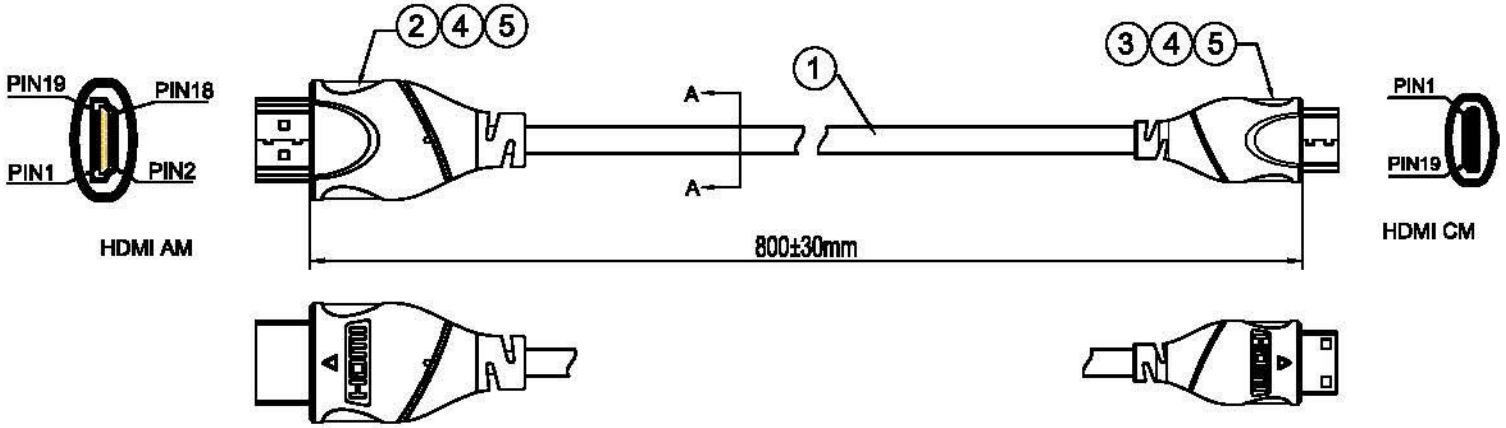

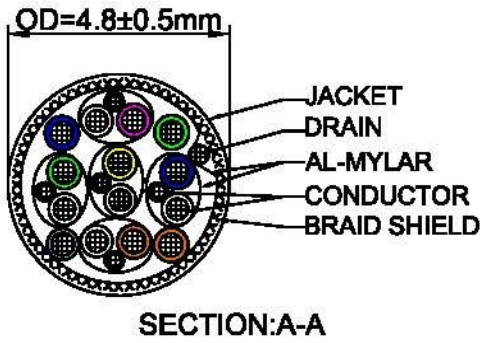

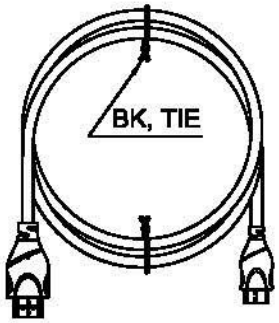

PIN ASSIGNMENT:

AM 1	AM 2	Signal Name
1	2	TMDS Data2+
3	3	TMDS Data2-
2	1	TMDS Data2 Shield
4	5	TMDS Data1+
6	6	TMDS Data1-
5	4	TMDS Data1 Shield
7	8	TMDS Data0+
9	9	TMDS Data0-
8	7	TMDS Data0 Shield
10	11	TMDS Clock+
12	12	TMDS Clock-
11	10	TMDS Clock Shield
13	14	CEC
14	17	UTILITY
19	19	HOT PLUG DETECT
17	13	DDC/CEC Ground
15	15	SCL
16	16	SDA
18	18	+5V Power
SHELL	SHELL	

No.	TITLE	DESCRIPTION	Q'TY
5	PVC	OVER MOLDING : 40P BLACK	A/R
4	PE	IN MOLDING : MG70 LDPE	A/R
3	CONN	HDMI 19 PIN C/M TYPE, Shell Plated Ni + Contact Plated G/F	1 SET
2	CONN	HDMI 19 PIN A/M TYPE, Shell Plated Ni + Contact Plated G/F	1 SET
1	CABLE	HDMI CABLE 1.4Rev With Ethernet 34AWG 7/0.06x5P+34AWG 7/0.06x4C PVC BLACK OD:4.8mm	A/R

Material		Part Number		Note	***	3RD

rotronic

DESC.	ROLINE HDMI Cable, w/Ethernet, AM/CM, 0.8m, black				
ITEM NO.	11.04.5568			DATE	2013.07.26
SCALE	NONE	CHECK		DATE	2013.07.26
UNIT	mm	APPROVED	CGW	SHEET	1 OF 1