IM0041

Inductive sensor

IMC2035-ARKA/LS-100AK

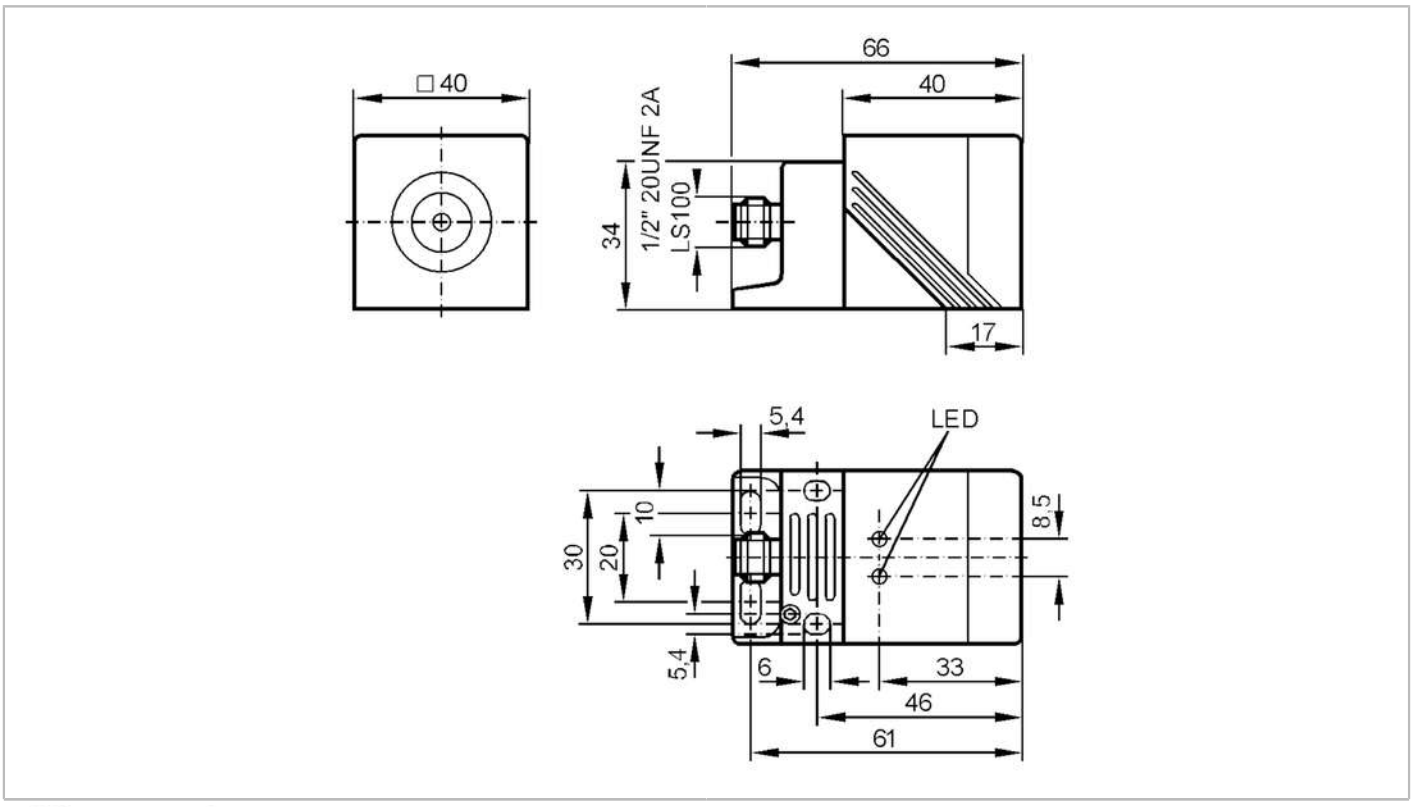

Product characteristics		
Output function		normally open
Sensing range	[mm]	35
Housing		rectangular
Application		
Special feature		Increased sensing range
Electrical data		
Frequency AC	[Hz]	47...63
Operating voltage	[V]	20...140 AC / 10...140 DC
Protection class		I
Reverse polarity protection		yes
Outputs		
Output function		normally open
Max. voltage drop switching output DC	[V]	5.5
Max. voltage drop switching output AC	[V]	5.5
Minimum load current	[mA]	5.5
Max. leakage current	[mA]	1.7 (140 V AC/DC)
Short-time current rating of switching output	[mA]	2200; (20 ms / 0,5 Hz)
Switching frequency AC	[Hz]	25
Switching frequency DC	[Hz]	100

IM0041

Inductive sensor

IMC2035-ARKA/LS-100AK

Short-circuit protection		yes	
Type of short-circuit protection		pulsed	
Overload protection		yes	
Detection zone			
Sensing range	[mm]	35	
Operating distance	[mm]	0...28.3	
Increased sensing range		yes	
Accuracy / deviations			
Correction factor		steel: 1 / stainless steel: 0.7 / brass: 0.4 / aluminium: 0.4 / copper: 0.3	
Hysteresis	[% of Sr]	3...15	
Operating conditions			
Ambient temperature	[°C]	-25...70	
Protection		IP 67	
Tests / approvals			
EMC		EN 60947-5-2	
MTTF	[years]	353	
UL approval		Ta	0...40 °C
		Enclosure type	Type 1
		power supply	Hazardous voltage
		File number UL	E174191
Mechanical data			
Weight	[g]	254.55	
Housing		rectangular	
Mounting		non-flush mountable	
Materials		PPE; clamp: diecast zinc	
Displays / operating elements			
Display		switching status	1 x LED, red
		operation	1 x LED, green
Remarks			
Remarks		5 positions of the active zone possible	
Pack quantity		1 pcs.	

IM0041

Inductive sensor

IMC2035-ARKA/LS-100AK

Electrical connection - plug

Connector: 1 x 1/2"; coding: C; Locking: brass

