TD2811

TD-050CFEC01-A-ZVG/US

Temperature sensors

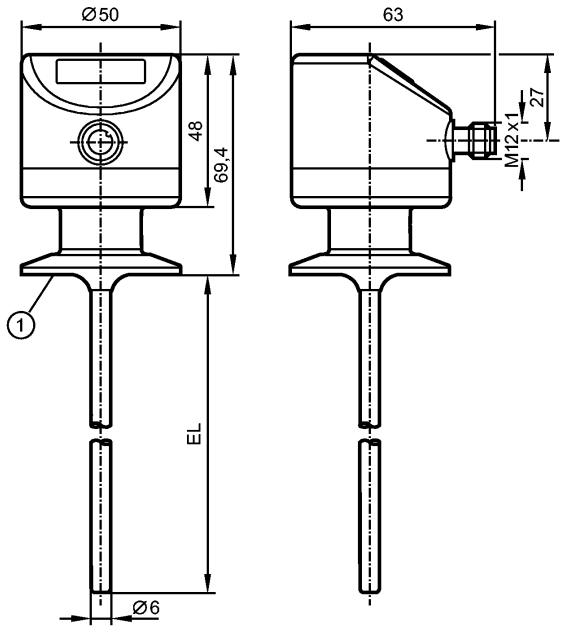

1: 1.5" clamp (ISO 2852)
EL = Installation length

EC 1935/2004 EHEDG Certified

IO-Link

Product characteristics
Temperature Transmitter with Display
Process connection: 1.5" clamp (ISO 2852)
Installation length EL: 50 mm
Analog output
7-segment LED display (4 digits)
Measuring range: -50...150 °C / -58...302 °F
Measuring element: 1 x Pt 1000, to DIN EN 60751, class A
Factory setting: -10...150 °C

Application		
Application		liquids and gases
Pressure rating	[bar]	160
Vacuum resistance	[mbar]	-1000

Electrical data		
Electrical design		DC
Operating voltage	[V]	18...32 DC; cULus - Class 2 source required
Current consumption	[mA]	< 50
Protection class		III
Reverse polarity protection		yes

Outputs	
Output	Analog output
Short-circuit protection	yes
Overload protection	yes
Analog output	4...20 mA

TD2811

TD-050CFEC01-A-ZVG/US

Temperature sensors

Max. load	[Ω]	300	
Measuring / setting range			
Measuring range		-50...150 °C	-58...302 °F
Factory setting		-10...150 °C	
Resolution			
Analog output	[K]	≤ 0.04	
Display	[K]	0.1	
Accuracy / deviations			
Analog output	[K]	± 0.3 + (± 0.1 % MS)	
Temperature coefficients (in % of the span per 10 K)		0.1	
Reaction times			
Power-on delay time	[s]	2	
Dynamic response	T05 / T09 [s]	1 / 3	
Interfaces			
IO-Link Device			
Transfer type		COM2 (38.4 kBaud)	
IO-Link revision		1.1	
Environment			
Ambient temperature	[°C]	-25...80	
Storage temperature	[°C]	-40...100	
Protection		IP 67 / IP 68 / IP 69K	
Tests / approvals			
EMC		DIN EN 61000-6-2 DIN EN 61000-6-3	
Shock resistance		DIN IEC 68-2-27:	50 g (11 ms)
Vibration resistance		DIN IEC 68-2-6:	10 g (10...2000 Hz)
MTTF	[Years]	405	
UL approval number		K001	
Mechanical data			
Process connection		1.5" clamp (ISO 2852)	
Materials (wetted parts)		stainless steel 316L / 1.4404; surface characteristics Ra: < 0.6	
Probe diameter	[mm]	6	
Installation length EL	[mm]	50	
Housing materials		housing: stainless steel 316L / 1.4404	
Weight	[kg]	2.334	
Displays / operating elements			
Display		7-segment LED display (4 digits) Display unit / status	°C / °F
Electrical connection			
Connection		M12 connector	

Wiring

TD2811

TD-050CFEC01-A-ZVG/US

Temperature sensors



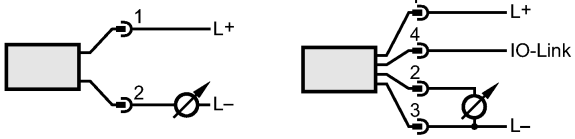

Remarks

Remarks	MS = set measuring span
Pack quantity [piece]	1