Product data sheet
Characteristics

XZCP2540L5
pre-wired connectors XZ - elbowed female - M12 - 3 pins - cable PUR 5m



Main

Accessory / separate part category	Cabling accessory
Accessory / separate part type	Pre-wired connectors
Series name	General purpose

Complementary

Electrical connection	Elbowed female connector M12, 3 pins
Cable connector fixing	Screw-on
Collar material	Stainless steel
Status LED	2 PNP LEDs
Cable length	5 m
Cable outer diameter	5.2 mm
Cable composition	3 x 0.34 mm²
Wire insulation material	PUR
[Ue] rated operational voltage	10...30 V DC
[In] rated current	4 A
Contact resistance	5000 µOhm
Minimum insulating resistance	1 GΩ
Net weight	0.18 kg

Environment

IP degree of protection	IP67 IP65 IP69K
Product certifications	CULus
Ambient air temperature for operation	-40…80 °C static -5…80 °C flexing
Ambient air temperature for storage	-40…80 °C

Packing Units

Package 1 Weight	0.136 kg

Offer Sustainability

Sustainable offer status	Green Premium product
REACh Regulation	REACh Declaration
EU RoHS Directive	Pro-active compliance (Product out of EU RoHS legal scope) EU RoHS Declaration
Mercury free	Yes
RoHS exemption information	Yes

The information provided in this documentation contains general descriptions and/or technical characteristics of the performance of the products contained herein.
This documentation is not intended as a substitute for and is not to be used for determining suitability or reliability of these products for specific user applications.
It is the duty of any such user or integrator to perform the appropriate and complete risk analysis, evaluation and testing of the products with respect to the relevant specific application or use thereof.
Neither Schneider Electric Industries SAS nor any of its affiliates or subsidiaries shall be responsible or liable for misuse of the information contained herein.

Environmental Disclosure	Product Environmental Profile
Circularity Profile	End Of Life Information

Contractual warranty

Warranty	18 months

XZCP2540L5

Dimensions

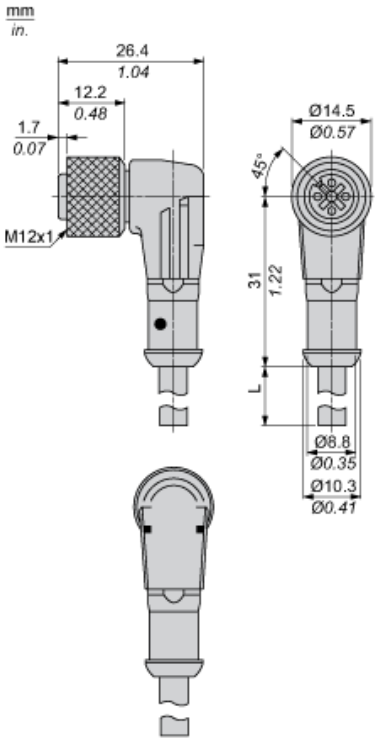

L : Lenght of cable

Connections and Schemes

Connector

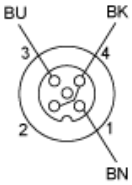

BN : Brown
BK : Black
BU : Blue

Connections and Schemes

LED Connection

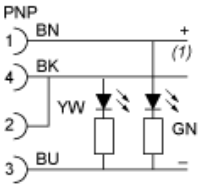

BN : Brown
BK : Black
BU : Blue
GN : Green
YW : Yellow
(1) Signal