MOFLASH SIGNALLING

LED-TL Modular



Overview

VISUAL SIGNALS - INDUSTRIAL - LED TRAFFIC LIGHT BEACONS

The LED Traffic Light has been designed for industrial & commercial signalling applications where a low maintenance, long life and a cost effective solution is required. The TL system is suitable for car park management, factory traffic control, automated gate and door control systems for both indoor & outdoor applications.

They can be surface mounted onto any flat vertical surface and used as a stand-alone module. Alternatively, the modular design of the traffic light allows for multiple units to be pre-assembled by the installer to create a multiple indication light system. Each unit comes supplied as standard with all components required for multiple assembly for surface mount installation.

All colour modules incorporate a jumper link on the PCB that allows the unit to flash once energised. Cable termination is inside the enclosure and can be accessed via either the 2 x M20 conduit knockouts (top or bottom) or 1 x M20 rear conduit entry.

Features

- Continuously rated
- Flashing or Static
- Blue or White colour options available
- Multiple modular construction option
- Low current consumption
- Suitable for surface or wall mounting
- 120° light output around the horizontal axis
- Available in 12vAC/DC, 24vAC/DC, 48vAC/DC and 115/230vAC/DC

Material

- UV Stable Polycarbonate Lens & Shroud
- UV Stable ABS Plastic Base

*Flashes Per Minute

IP 65

36 SMT LED

60 or 120 FPM*

-25 to +55°C

50/60Hz

APPROVALS & CONFORMITIES

ISSUE 1

uksales@moflash.co.uk
moflashkm@moflash.com
exportsales@moflash.co.uk

11 Upper Conybere Street
Highgate, Birmingham
B12 0EB, England

UK +44(0)121 446 5322
FR +33(0)1 70 72 12 71

www.moflash.com

MOFLASH SIGNALLING

LED-TL Modular

Ordering Information

Voltage		Ordering Information			Mode & Current Consumption		
Nominal Voltage	Voltage Range	Amber	Red	Green	Flashing @60FPM	Flashing @120FPM	Static
12vAC/DC	8-20vAC/DC	LED-TL-01-01	LED-TL-01-02	LED-TL-01-04	94mA @12vDC	89mA @12vDC	158mA @12vDC
24vAC/DC	20-30vAC/DC	LED-TL-02-01	LED-TL-02-02	LED-TL-02-04	70mA @24vDC	67mA @24vDC	120mA @24vDC
48vAC/DC	35-85vAC/DC	LED-TL-03-01	LED-TL-03-02	LED-TL-03-04	43mA @48vDC	42mA @48vDC	76mA @48vDC
115-230vAC/DC	85-280vAC/DC	LED-TL-05-01	LED-TL-05-02	LED-TL-05-04	24mA @230vAC	25mA @230vAC	28mA @230vAC

Effective Candela (Cd) - Formula Blondel-Rey		
Amber	Red	Green
131.28	147.19	122.05

Weights & Dimensional Drawings

Kg	12v	24v	48v	115-230v
Net Weight	0.190	0.190	0.218	0.220
Gross Weight	0.290	0.290	0.318	0.320

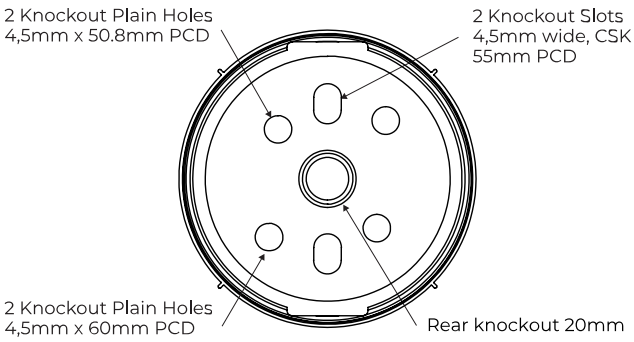

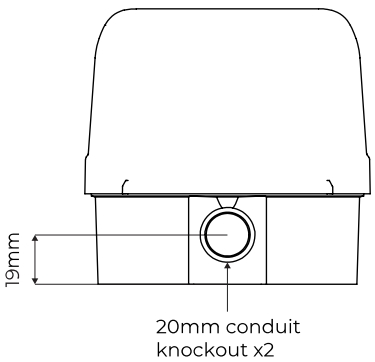

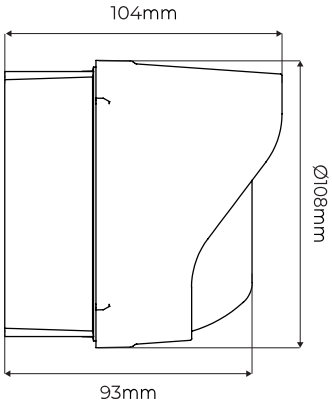

Accessories

Part Code	Description
50124	Single Mounting Bracket with Glands
50125	Double Mounting Bracket with Glands
50126	Triple Mounting Bracket with Glands


50124


50125


50126

uksales@moflash.co.uk
moflashkm@moflash.com
exportsales@moflash.co.uk
UK +44(0)121 446 5322
FR +33(0)1 70 72 12 71
11 Upper Conybere Street
Highgate, Birmingham
B12 0EB, England
www.moflash.com

APPROVALS & CONFORMITIES

UK CA CE RoHS