TECHNICAL DATA SHEET

ABB cable glands – RNCG series

Nylon, rail specific EN45545



EN45545 Compliant cable gland for use in rail, rolling stock and infrastructure applications.

Certifications / Standards:

CE

Features & Benefits:

- EN45545-2 Compliant HL3 for R22 and R23 usage
- Lightweight nylon construction
- Large capacity sealing range
- Corrosion resistant

Applications:

- General purpose rolling stock and infrastructure applications
- R22 interior locations for small components
- R23 exterior locations for small components
- Suitable for cable types:
  - Non-armoured
  - Portable
  - Tray

Material:

- All materials EN 45545-2 compliant to HL3 for category R22 and R23 use
- Low smoke zero halogen nylon body and cap
- Low smoke zero halogen EPDM seals

Environmental ratings:

Working Temperature:

- Normal use: -40 to +100°C (-40 to +212°F)
- Short term: -40 to +120°C (-40 to +248°F)

Ingress protection:

To ensure ingress protection, use suitable gasket and lock nut when required.

- IP66
- IP68 (5 bar 30 mins)
- IP69

Fire

- EN 45545-2 HL3

Chemical resistance guide:

- See publication TDS000081

Conforms to:

- EN 45545-2, HL3 (R22 and R23)
- EN 62444
- RoHS (Restriction of Hazardous Substances Directive) 2011/65/EU Incorporating 2015/863 amendment to Annex II
- WEEE (Waste Electrical & Electronic Equipment Directive) 2002/96/EC
- LVD (Low Voltage Directive) 2014/35/EU

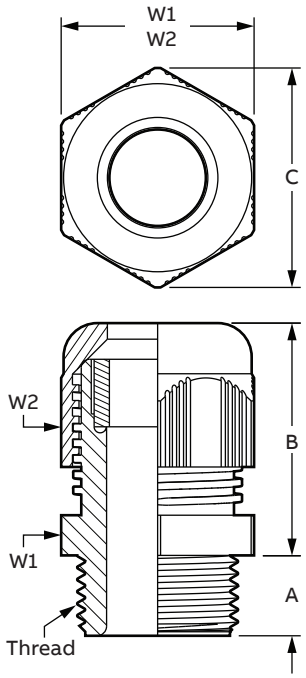

Product selection

Part no:	Thread (metric)	Cable range		Nominal dimensions				
		Min	Max	A	B	C	W1	W2
RNCG-M122	M12x1.5	**3.0**	**6.5**	**8.0**	**23.0**	**16.9**	**15.0**	**15.0**
		(0.118)	(0.256)	(0.315)	(0.906)	(0.665)	(0.591)	(0.591)
RNCG-M163-S	M16x1.5	**4.0**	**8.0**	**8.0**	**26.5**	**21.9**	**19.0**	**19.0**
		(0.157)	(0.315)	(0.315)	(1.043)	(0.862)	(0.748)	(0.748)
RNCG-M163	M16x1.5	**4.0**	**8.0**	**10.0**	**26.5**	**21.9**	**19.0**	**19.0**
		(0.157)	(0.315)	(0.394)	(1.043)	(0.862)	(0.748)	(0.748)
RNCG-M164	M16x1.5	**5.0**	**10.0**	**10.0**	**30.0**	**25.0**	**22.0**	**22.0**
		(0.197)	(0.394)	(0.394)	(1.181)	(0.984)	(0.866)	(0.866)
RNCG-M164-L	M16x1.5	**5.0**	**10.0**	**15.0**	**30.0**	**25.0**	**22.0**	**22.0**
		(0.197)	(0.394)	(0.591)	(1.181)	(0.984)	(0.866)	(0.866)
RNCG-M202	M20x1.5	**6.0**	**12.0**	**10.0**	**30.0**	**27.0**	**24.0**	**24.0**
		(0.236)	(0.472)	(0.394)	(1.181)	(1.063)	(0.945)	(0.945)
RNCG-M202x-L	M20x1.5	**6.0**	**12.0**	**15.0**	**30.0**	**27.0**	**24.0**	**0.24**
		(0.236)	(0.472)	(0.591)	(1.181)	(1.063)	(0.945)	(0.945)
RNCG-M205	M20x1.5	**10.0**	**14.0**	**10.0**	**33.5**	**31.0**	**27.0**	**27.0**
		(0.394)	(0.551)	(0.394)	(1.319)	(1.22)	(1.063)	(1.063)
RNCG-M205-L	M20x1.5	**10.0**	**14.0**	**15.0**	**33.5**	**31.0**	**27.0**	**27.0**
		(0.394)	(0.551)	(0.591)	(1.319)	(1.22)	(1.063)	(1.063)
RNCG-M254	M25x1.5	**13.0**	**18.0**	**10.0**	**38.0**	**38.0**	**33.0**	**33.0**
		(0.512)	(0.709)	(0.394)	(1.496)	(1.496)	(1.299)	(1.299)
RNCG-M254-L	M25x1.5	**13.0**	**18.0**	**15.0**	**38.0**	**38.0**	**33.0**	**33.0**
		(0.512)	(0.709)	(0.591)	(1.496)	(1.496)	(1.299)	(1.299)
RNCG-M324-L	M32x1.5	**18.0**	**25.0**	**15.0**	**42.0**	**47.3**	**42.0**	**42.0**
		(0.709)	(0.984)	(0.591)	(1.654)	(1.862)	(1.654)	(1.654)
RNCG-M404	M40x1.5	**22.0**	**32.0**	**18.0**	**52.0**	**60.0**	**53.0**	**53.0**
		(0.866)	(1.26)	(0.709)	(2.047)	(2.362)	(2.087)	(2.087)

Color is Ral 7035 light grey (other colors available on request).
Bold numbers are metric, parenthesis numbers are inches.
Note: Product must be installed in accordance with applicable national and local electrical codes.

ABB Inc.
Electrification products
Memphis, Tennessee
USA

We reserve the right to make technical changes or modify the contents of this document without prior notice. With regard to purchase orders, the agreed particulars shall prevail. ABB Inc. does not accept any responsibility whatsoever for potential errors or possible lack of information in this document.

We reserve all rights in this document and in the subject matter and illustrations contained therein. Any reproduction, disclosure to third parties or utilization of its contents – in whole or in parts – is forbidden without prior written consent of ABB Inc.
Copyright© 2017 ABB Inc.
All rights reserved.

abb.com