E20753

Fibre optic through-beam sensor

FE-11-EPA-M4/F1x1/2M

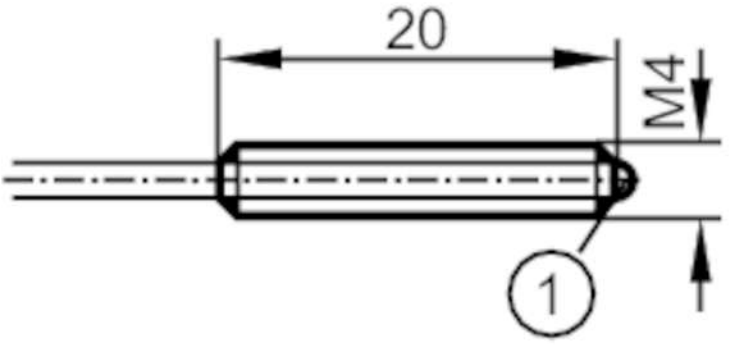

1 glass lens

Application		
Function principle		Through-beam sensor
Application		For use in industrial environments
Detection zone		
Range with fibre-optic amplifier type		OB50; OBF; OCF; OO50
OB50		
Range of fibre optics	[mm]	400
OBF		
Range of fibre optics	[mm]	900
OCF (High Power)		
Range of fibre optics	[mm]	4000
OO50		
Range of fibre optics	[mm]	1600
Operating conditions		
Ambient temperature	[°C]	-40...70
Mechanical data		
Weight	[g]	47.5
Version of sensing head		straight
Sensing head thread		M4

E20753

Fibre optic through-beam sensor

FE-11-EPA-M4/F1x1/2M

Total length	[mm]	2000
Min. bending radius	[mm]	30
Fibre arrangement		◉
Core diameter	[mm]	1
Fibre material		PMMA
Fibre head material		aluminium
Fibre sheath material		PE
Accessories		
Items supplied		hexagon nuts: 4 x M4
		tooth lock washers: 4
Accessories (optional)		Cutter for fibre optics:, E20600
Remarks		
Pack quantity		1 pcs.