DP1222

Converter 0...10 V - IO-Link

Converter 2x0-10V/IO-Link

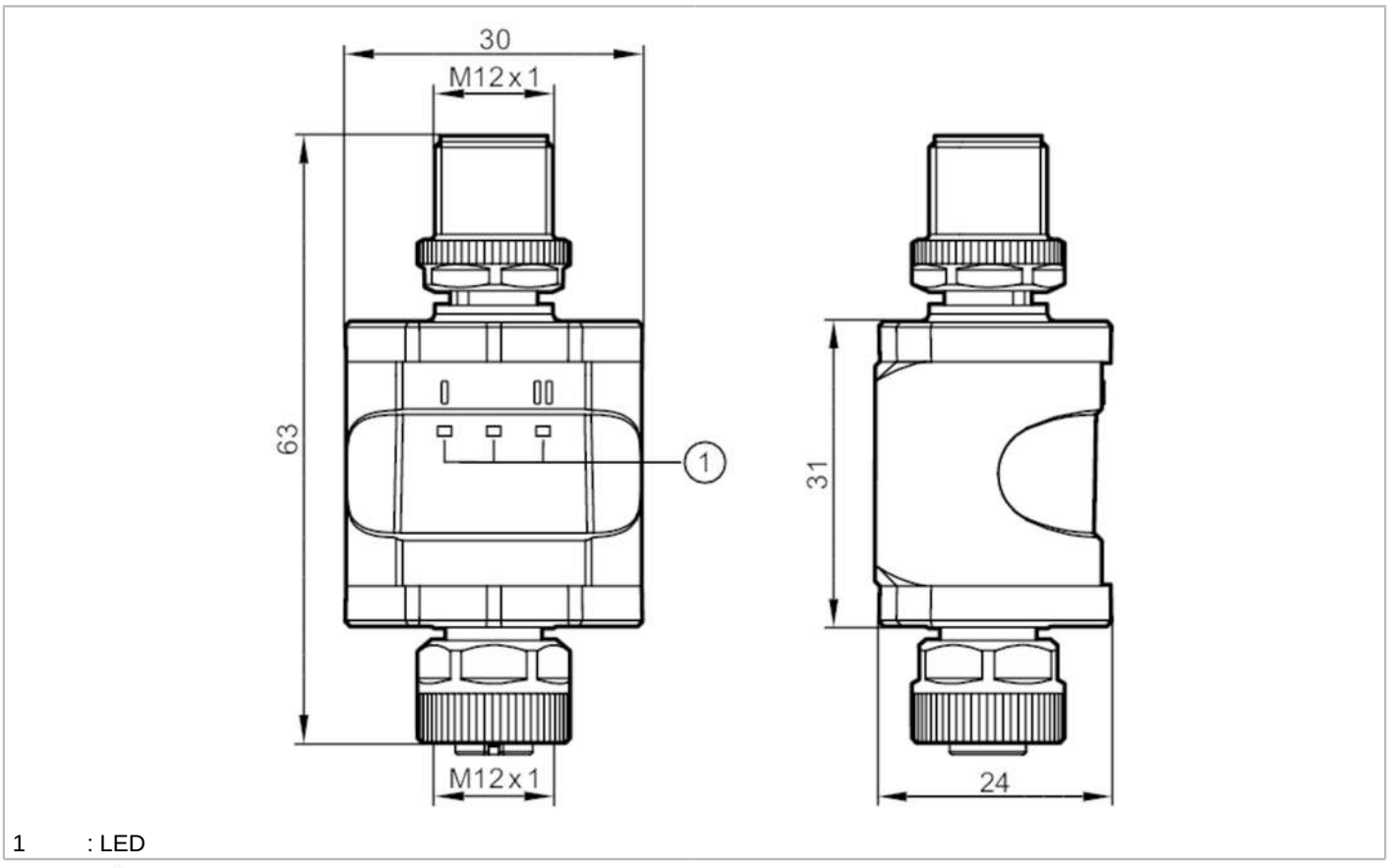

1 : LED

Product characteristics		
Number of inputs and outputs		Number of analogue inputs: 2
Communication interface		IO-Link
Electrical data		
Operating voltage	[V]	18...30 DC; (to SELV/PELV)
Nominal voltage DC	[V]	24
Current consumption	[mA]	< 380
Inputs / outputs		
Number of inputs and outputs		Number of analogue inputs: 2
Inputs		
Max. total current rating of inputs	[mA]	200
Number of analogue inputs		2
Analogue input (voltage)	[V]	0...10
Interfaces		
Communication interface		IO-Link
Transmission type		COM2 (38,4 kBaud)
IO-Link revision		1.1
SDCI standard		IEC 61131-9
Profiles		Smart Sensor 0x4000: Identification and Diagnosis 0x8001: Switching Signal Channel 0x8006: Adjustable Switching Signal Channel

DP1222

Converter 0...10 V - IO-Link

Converter 2x0-10V/IO-Link

SIO mode		no	
Required master port type		A/B	
Process data analogue		2	
Supported DeviceIDs		**Type of operation**	**DeviceID**
		CMPT = 1	613
		STATUS_B / CMPT = 2 (Factory setting)	1428
CMPT = 1			
Min. process cycle time	[ms]	4.3	
STATUS_B / CMPT = 2 (Factory setting)			
Min. process cycle time	[ms]	4.6	
Operating conditions			
Ambient temperature	[°C]	-25...70	
Note on ambient temperature		2000 m: -25...70 °C	
		3000 m: -25...64 °C	
		4000 m: -25...62 °C	
Storage temperature	[°C]	-25...70	
Max. relative air humidity	[%]	90; (linearly decreasing to 50 % (40 °C) non condensing)	
Max. height above sea level	[m]	4000	
Protection		IP 67	
Pollution degree		2	
Tests / approvals			
MTTF	[years]	504	
Mechanical data			
Weight	[g]	92	
Materials		housing: PA	
Displays / operating elements			
Display		operation	1 x LED, green
		analogue input	2 x LED, yellow
Accessories			
Accessories (optional)		mounting clip	
Remarks			
Remarks		For further information please see the operating instructions.	
Pack quantity		1 pcs.	
Electrical connection - plug			

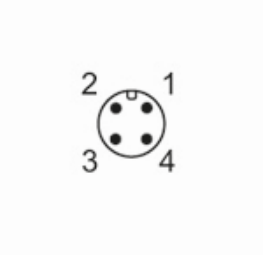

1:	L+
2:	not used
3:	L-
4:	C/Q IO-Link

DP1222

Converter 0...10 V - IO-Link

Converter 2x0-10V/IO-Link

Electrical connection - socket



1:	L+
2:	0...10 V analogue input 2
3:	L-
4:	0...10 V analogue input 1
5:	not used