efector100

IL5002

ILA3002-BPKG/OBEN/PH RT

Inductive sensors

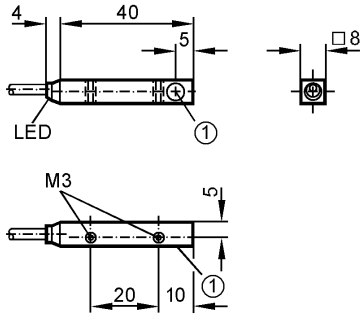

1: sensing face

Made in Germany

Product characteristics		
Inductive sensor		
Rectangular Metal		
Cable		
Sensing range 2 mm; [f] flush mountable		
Electrical data		
Electrical design		DC PNP
Operating voltage	[V]	10...36 DC
Current consumption	[mA]	15; (24 V)
Protection class		III
Reverse polarity protection		yes
Outputs		
Output function		normally open
Voltage drop	[V]	< 2.5
Current rating	[mA]	250
Short-circuit protection		pulsed
Overload protection		yes
Switching frequency	[Hz]	2000
Range		
Sensing range	[mm]	2
Real sensing range (Sr)	[mm]	2 ± 10 %
Operating distance	[mm]	0...1.6
Accuracy / deviations		
Correction factors		mild steel = 1 / stainless steel approx. 0.7 / brass approx. 0.5 / Al approx. 0.4 / Cu approx. 0.3
Hysteresis	[% of Sr]	1...15
Switch-point drift	[% of Sr]	-10...10
Environment		
Ambient temperature	[°C]	-25...70
Protection		IP 65
Tests / approvals		
EMC		EN 60947-5-2

IL5002

ILA3002-BPKG/OBEN/PH RT

MTTF	[Years]	3449
Mechanical data		
Mounting		flush mountable
Housing materials		Brass white bronze coated; active face: LCP
Tightening torque	[Nm]	1 (For an insertion depth of at least 5 mm)
Weight	[kg]	0.045
Displays / operating elements		
Output status indication	LED	Red
Electrical connection		
Connection		PUR cable / 2 m; 3 x 0.14 mm²

Wiring

Core colours

BN brown

BU blue

BK black

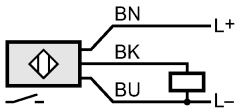

Remarks		
Pack quantity	[piece]	1