

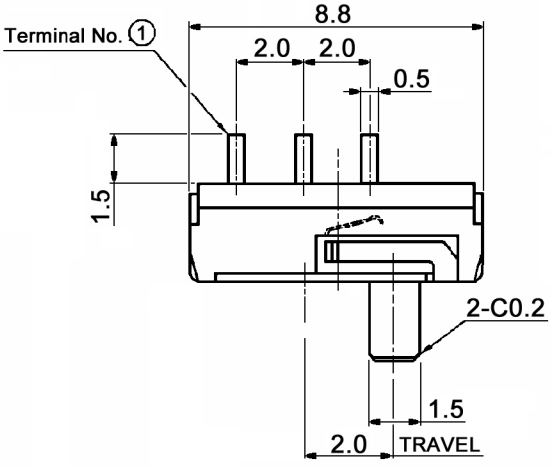

P.C.B. LAYOUT ⊕ 0.05

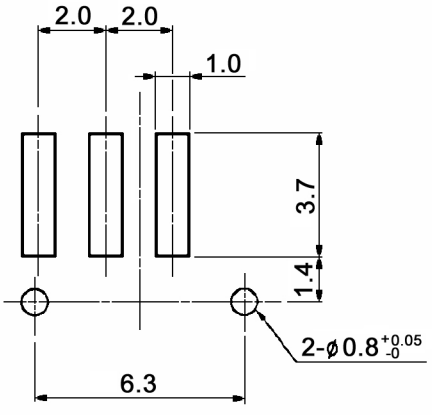

CIRCUIT DIAGRAM
C: COMMON PIN
BOTTOM VIEW

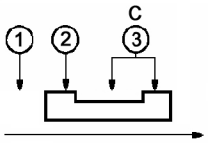

Specifications:

Contact rating:	0.5A, 4V DC; 0.3A, 6V DC; 0.2A, 12V DC
Contact resistance:	70mOhm max.
Insulation resistance:	100MOhm min. at 100V DC for 1 minute
Dielectric strength:	100V AC (50/60Hz, 2mA) for 1 minute
Operating temperature:	-40°C to +85°C
Storage temperature:	-40°C to +85°C
Mechanical life:	10 000 cycles
Operating force:	130gf +/-50gf
Packaging unit:	100 pcs. / tray (10 trays / box)
Material:	Cover: SUS, washing
	Slider: PA66, cream
	Case: PA46, black
	Contact plate: C1720, silver plated
	Terminal: brass strip, silver plated

Compliance: RohS II (2011/65/EU)

Tolerances: up to 10: ±0.2mm above 10-50: ±0.3mm			Date	Name
			07/14	dr
Modifications	Date	Name		

MMS 124

knitter-switch

30 31 60

Page 1/2

Soldering conditions:

Temperature profile of reflow soldering

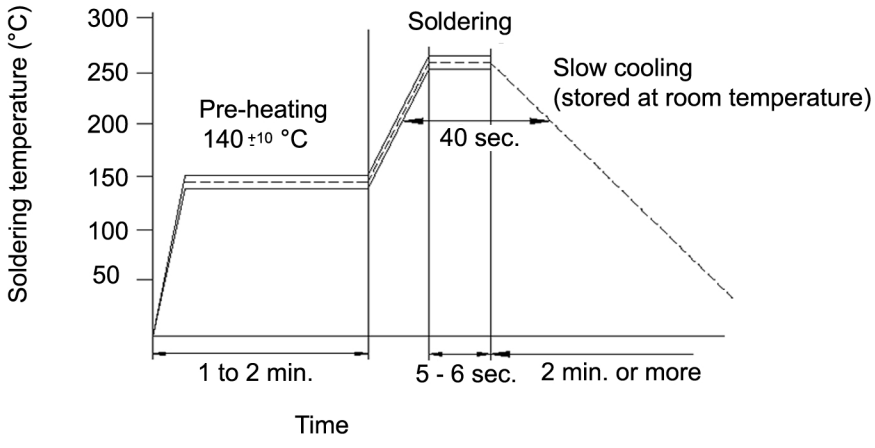

Peak: 260 +/-3°C; 5 - 6sec. / 220 +/-5°C; 40sec.

Compliance: RohS II (2011/65/EU)

Tolerances: up to 10: ±0.2mm above 10-50: ±0.3mm			Date 07/14	Name dr	MMS 124
			knitter-switch	30 31 60	Page 2/2
Modifications	Date	Name			