POTENTIOMETER JOYSTICK - STOCK NO. 467-9032

OCS - 4000 SERIES

APEM

The **RS** potentiometer joystick employs high quality, plastic film 10K potentiometers with 340° tracks. This joystick has an all-metal mechanism to provide the finest performance and service life over a wide range of temperatures and loads. Furthermore the 5mm shaft ensures a truly robust solution for everyday use.

With a shaft travel angle of 55° (+/- 27.5°) a typical 12V supply would therefore result in full-scale nominal deflection from 5V to 7V, operating about a nominal 6V centre.

Designed for sub panel mount the joystick is supplied with a mounting bezel, which if required, may be affixed to the top side of the panel to complete the finish.

Being a sub panel mount product, the throw of the shaft maybe controlled by the size and shape of the panel cut-out.

The joystick is designed for use as a variable potential divider, rather than a two pin variable resistor. Noise generated by the contact resistance of the wiper to the track dictates that for optimum performance the output signals should be fed into a load of greater than 100K.

MOUNTING DIMENSIONS

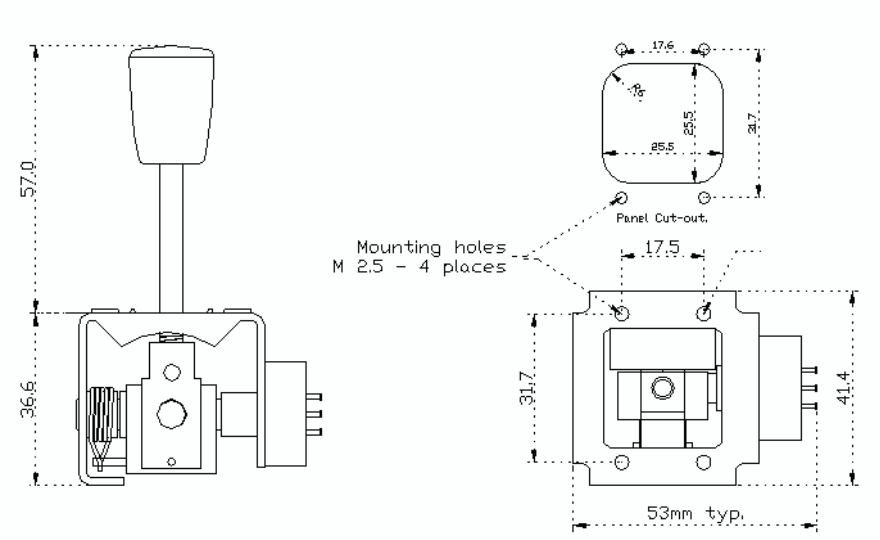

WIRING SPECIFICATION

Red	+Vs
Blue	X Axis output
Yellow	Y Axis output
Black	0V

MECHANICAL SPECIFICATION

Frame	Pressed metal
Shafts	Stainless steel
Pivot blocks	HE30 Alloy
Alignment	+/- 0.5% of track

Many of the these Apem products are also available through the RS Components catalogue

Switches and Indicators





Membrane Switchpanels

Joysticks



The Company reserves the right to change specification without notice. ADB0407