IKO

CAM FOLLOWERS

Thrust Disk Type Miniature Cam Followers·Stainless Steel Made With Cage/With Hexagon Hole



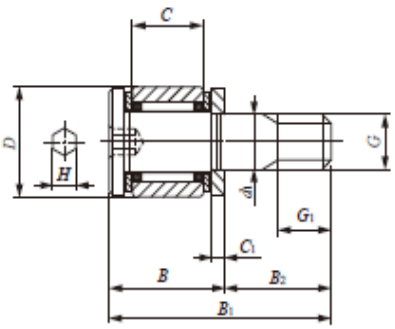

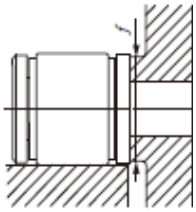

CFS···FW

RS Part Number	IKO Part Number	Stud Diameter (mm)	Mass (g)	D	C	d1	G	G1	B	B1
1251223	CFS 2FW	2	0.6	4.5	2.5	2	M2x0.4	2	4.5	8.5
1251224	CFS 2.5FW	2.5	1	5	3	2.5	M2.5x0.45	2.5	5	10
1251225	CFS 3FW	3	2	6	4	3	M3x0.5	3	6.5	12.5
1251226	CFS 4FW	4	4	8	5	4	M4x0.7	4	8	16
1251227	CFS 5FW	5	7	10	6	5	M5x0.8	5	9	19
1251228	CFS 6FW	6	13	12	7	6	M6x1	6	10.5	22.5



B2	C1	H	Mounting dimension ∫min (mm)	Maximum tightening torque (Nm)	Basic dynamic load rating C (N)	Basic static load rating Co (N)	Maximum allowable static load (N)
4	0.7	0.9	4.3	9.1	230	161	161
5	0.7	0.9	4.8	18.7	342	281	281
6	0.7	1.3	5.8	33.5	504	488	399
8	1	1.5	7.7	77.7	897	894	785
10	1	2	9.6	158	1250	1480	1370
12	1.2	2.5	11.6	268	1670	1760	1760