KSC2 Series

Sealed Tactile Switch for SMT 6.2 x 6.2 mm, with 3.5mm Height Soft Actuator



Description

The KSC2 series of sealed tactile switches for SMT are IP67 rated, 3.5mm high momentary action tactile switches, featuring a soft actuator. The switches are available with a variety of operating forces and in a range of electrical lifespans, depending on model. The KSC2 series are designed to give users a positive adaptable tactile feeling, perfect for consumer-facing applications.

Features & Benefits

- Electrical Height for easier integration due to more precise tolerances
- Soft actuator 3.5mm high
- IP67
- Compatible with lead free reflow soldering process of SMT devices
- Low halogen, RoHS and REACH compliant

Applications

- Industrial electronics
- Consumer products
- Transportation
- Medical

Specifications

Function	Momentary action
Contact Arrangement	1 make contact = SPST, N.O.
Terminals	J bend & Gullwing type for SMT
Sealing	IP67

Electrical Characteristics

Dielectric Strength (50 Hz, 1 min.)	≥ 250 Vrms	
Contact Resistance	≤ 100mΩ	
Insulation Resistance (100 V)	≥ 1000 M Ω	
Bounce Time	≤ 1 ms	
	Silver	**Gold**
Maximum Power	1 VA	0.2 VA
Maximum Voltage	32 VDC	32 VDC
Minimum Voltage	20 mV	20 mV
Maximum Current	50 mA	10 mA
Minimum Current	1 mA[1]	0.1 mA

Note:
1. Ultra low current with 10 µA - 1 VDC version is available upon request

Environmental Characteristics

	Silver	**Gold**
Operating Temperature	-40°C to 85°C	-40°C to 125°C
Storage Temperature	-55°C to 85°C	-55°C to 125°C

Dimensions (mm) J Termination

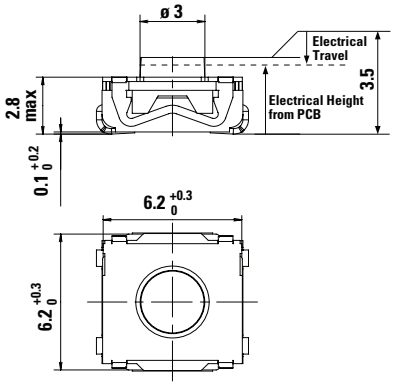

Dimensions (mm) G Termination

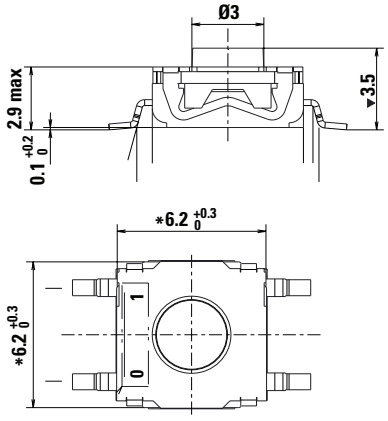

© 2025 Littelfuse, Inc.
Specifications are subject to change without notice.
Revised: VL 09/04/25

KSC2 Series

Sealed Tactile Switch for SMT 6.2 x 6.2 mm, with 3.5mm Height Soft Actuator

Mechanical Characteristics

			G Terminations	J Terminations	
Part #	Operating Force Fa (Newtons)	Operating Life (operations)	Electrical Travel (mm)	Electrical Travel for information only (mm)	Electrical Height from PCB (mm)
KSC201	1.6 ± 0.6	5,000,000	0.3 ± 0.2	0.3	3.35 ± 0.2
KSC221	2.25 ± 0.55	500,000	0.35+0.25/-0.15	0.25	3.25 ± 0.2
KSC222	2.25 ± 0.55	1,000,000	0.35+0.25/-0.15	0.35	3.25 ± 0.2
KSC241	3.5 ± 0.9	300,000	0.5 ± 0.2	0.5	3 ± 0.2
KSC241 SP DELTA	3.55 ± 0.9	300,000	0.5 ± 0.2	0.4	3.1 ± 0.2
KSC251	5.55 ± 1.45	300,000	0.5 ± 0.2	0.5	2.95 ± 0.15
KSC251 SP DELTA	6.2 ± 1.55	100,000	0.6 ± 0.2	0.55	2.95 ± 0.15

Note: Specifications listed above are for switches with standard options. For information on specific and custom switches, consult Customer Service Center.

Soldering Profile

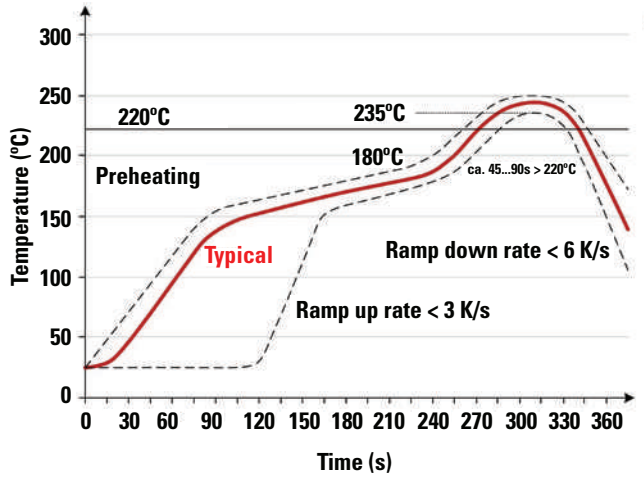

Note: Up to 2 reflow cycles in accordance with the above temperature profile

Soldering process: Depending on the application, this component is suited to the following methods:

- Terminals being silver or gold plated over a nickel barrier, the use of slightly activated flux is suitable.
- Lead free soldering process in accordance with the definition on the left.

J Terminations (mm)

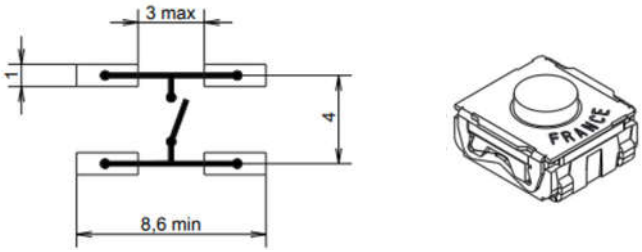

G Terminations (mm)

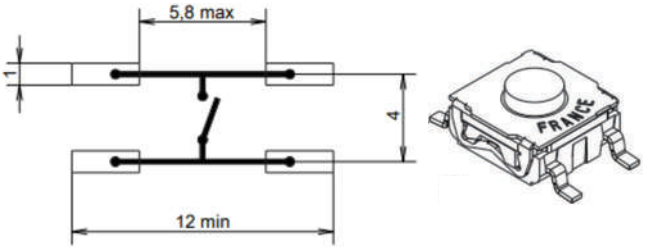

© 2025 Littelfuse, Inc.
Specifications are subject to change without notice.
Revised: VL 09/04/25

KSC2 Series

Sealed Tactile Switch for SMT 6.2 x 6.2 mm, with 3.5mm Height Soft Actuator

Tape & Reel

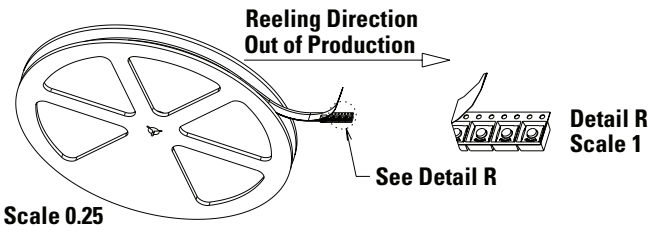

Packaging Details

Type	Tape & reel
Number of Parts in Packaging	2,000
Other Information	Tape and reel per EIA 481
Transport Conditions	According to specification NF H00-060

Packaging (mm)

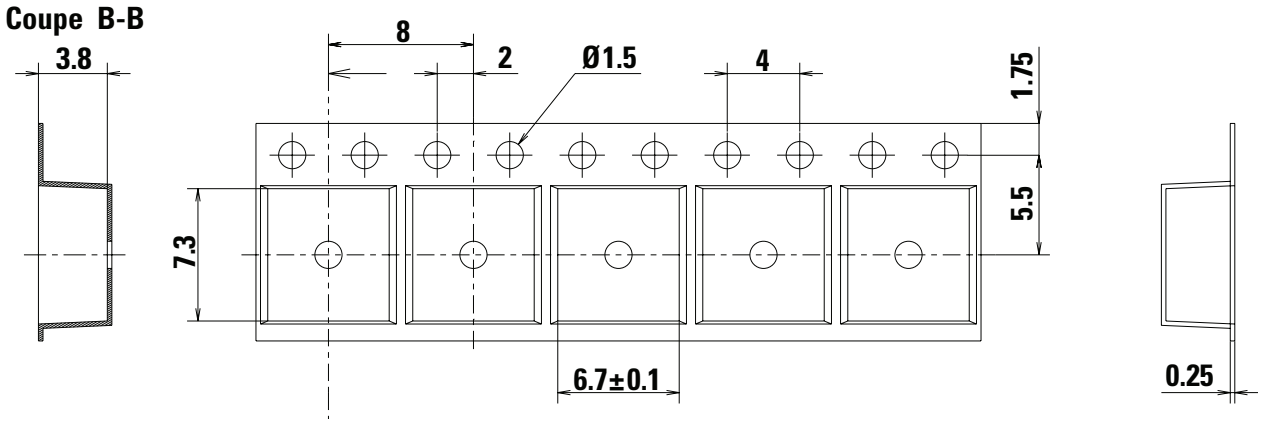

Ordering Number

Our easy build-a-switch concept allows you to mix and match options to create the switch you need. To order, select desired option from each category. However, please note that not all combinations of these options are feasible. For any part number different from those listed below, please consult your local representative.

KSC2 - x - x - x - x - x

Operating Force
0: 1.6 N (160 grams)
2: 2 N (200 grams)
4: 3.5 N (350 grams)
5: 5.5 N (550 grams)

Contact Material
1: Silver
2: Silver long life
3: Gold
4: Gold long life

Termination
J: J Bend
G: Gullwing

Tactile Ratio
NONE: Standard version
SP DELTA: Special delta version = higher tactile ratio

LFS: Lead free compatible, silver plated
LFG: Lead free compatible, gold plated

Liability Limitation

This datasheet does not provide enough information for applications that require a certain level of quality or safety such as automotive, medical systems, or safety equipement. Please contact customer service for the contractual specification package.

Disclaimer Notice - Information furnished is believed to be accurate and reliable. However, users should independently evaluate the suitability of and test each product selected for their own applications. Littelfuse products are not designed for, and may not be used in, all applications. Read complete Disclaimer Notice at http://www.littelfuse.com/disclaimer-electronics.

© 2025 Littelfuse, Inc.
Specifications are subject to change without notice.
Revised: VL 09/04/25