OI0003

Retro-reflective sensor

OIP-FBOA

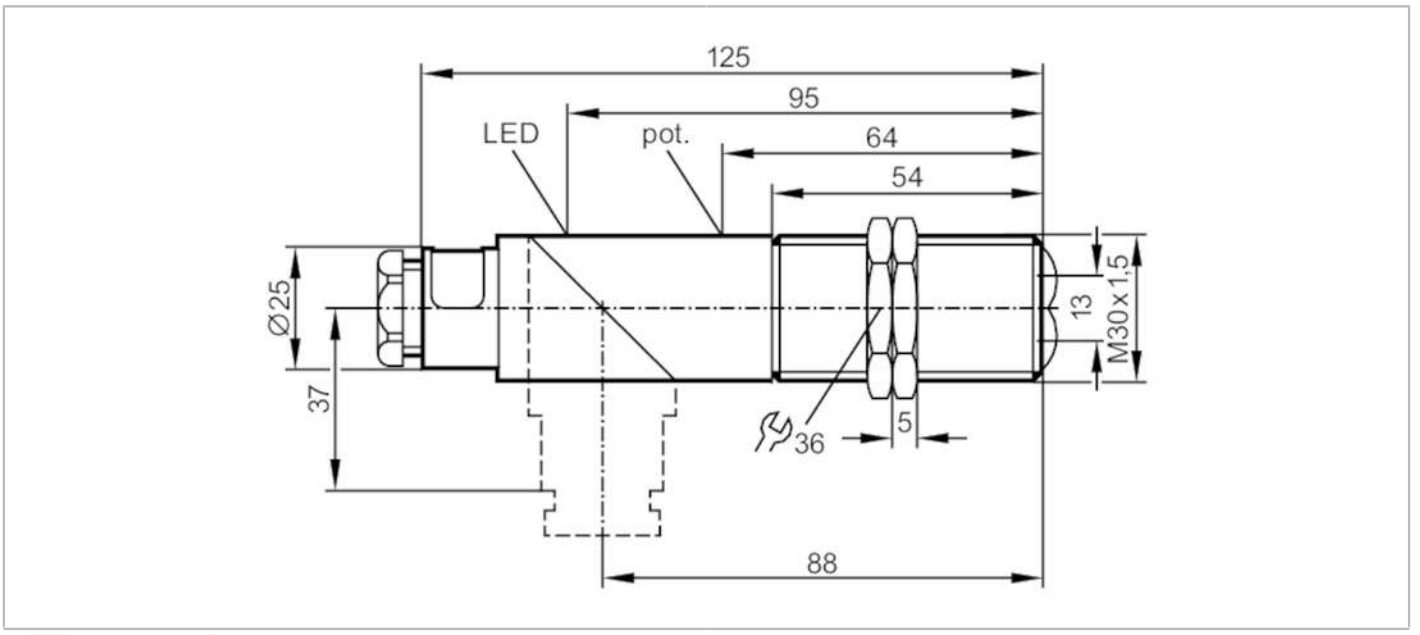

Product characteristics		
Type of light		red light
Housing		threaded type
Application		
Special feature		polarisation filter
Function principle		Retro-reflective sensor
Electrical data		
Operating voltage	[V]	20...250 AC/DC
Protection class		II
Reverse polarity protection		no
Type of light		red light
Wave length	[nm]	660
Outputs		
Output function		light-on/dark-on mode; (programmable)
Max. voltage drop switching output DC	[V]	10.5
Max. voltage drop switching output AC	[V]	10.5
Minimum load current	[mA]	15
Max. leakage current	[mA]	6
Permanent current rating of switching output AC	[mA]	250; (350 (...50 °C))
Permanent current rating of switching output DC	[mA]	250; (350 (...50 °C))
Short-time current rating of switching output	[mA]	2200; (10 ms / 0,5 Hz)
Switching frequency AC	[Hz]	25
Switching frequency DC	[Hz]	35

OI0003

Retro-reflective sensor

OIP-FBOA

Short-circuit proof		no
Overload protection		no
Detection zone		
Range referred to prismatic reflector	[m]	0.15...2; (Prismatic reflector Ø 80 E20005)
Range adjustable		yes
Max. light spot diameter	[mm]	200
Light spot dimensions refer to		at maximum range
Polarisation filter available		yes
Operating conditions		
Ambient temperature	[°C]	-25...60
Protection		IP 65
Tests / approvals		
EMC		EN 60947-5-2
MTTF	[years]	310
Mechanical data		
Weight	[g]	121
Housing		threaded type
Dimensions	[mm]	M30 x 1.5 / L = 125
Thread designation		M30 x 1.5
Materials		PBT; PPO modified
Lens material		PMMA
Displays / operating elements		
Display		switching status: 1 x LED, yellow
Electrical connection		
Required protection		miniature fuse to IEC60127-2 sheet 1; ≤ 2 A; fast acting
Accessories		
Items supplied		lock nuts: 2 screwdrivers
Remarks		
Remarks		Recommendation: Check the safe functioning of the unit after a short circuit.
Pack quantity		1 pcs.

OI0003

Retro-reflective sensor

OIP-FBOA

Electrical connection

terminals: ...1.5 mm²; Cable sheath: Ø 7...13 mm; Cable gland: M20 X 1.5

Connection

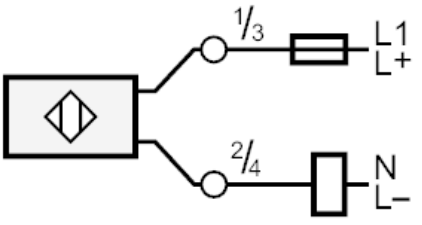

Note : miniature fuse to IEC60127-2 sheet 1 ≤ 2 A fast acting

Diagrams and graphs

excess gain graph

