Doc. N.° 1SDH002011A1920 - ECN000353147 - Rev. A

SACE Tmax XT

1SDH002011A1920

Ricambio placca lucida XT5
Spare Part Aesthetic Cover XT5
Ersatzteil Ästhetische Abdeckung XT5
Rechange couverture esthétique XT5
Repuesto cubierta estética XT5
零件美感封面 **XT5**

XT5 3P

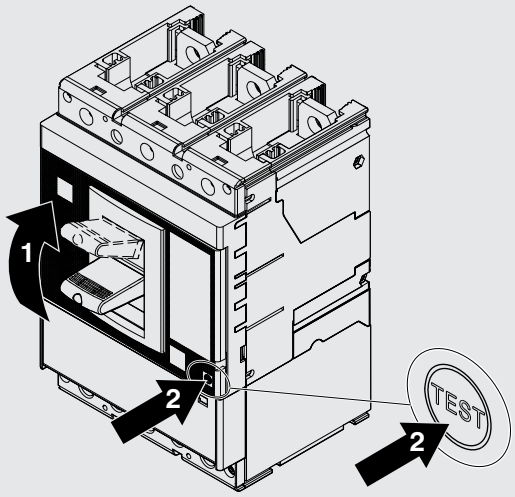

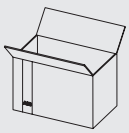

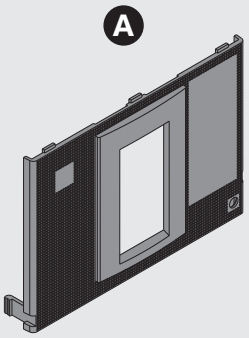

1

1

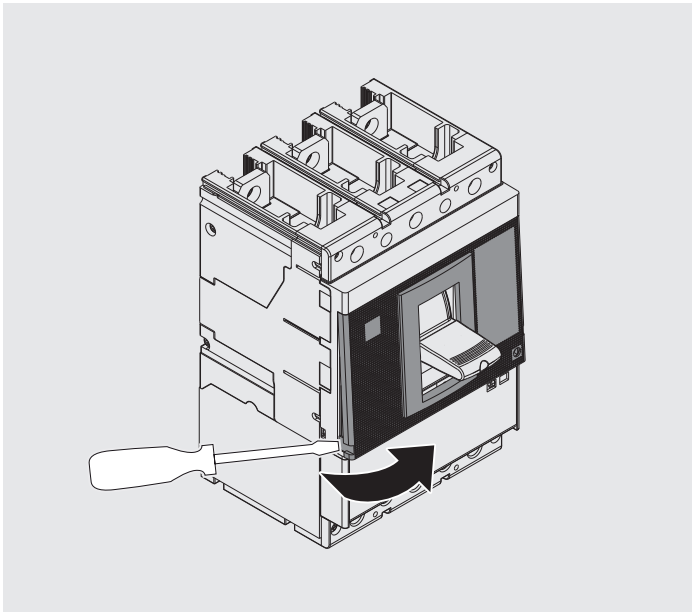

2

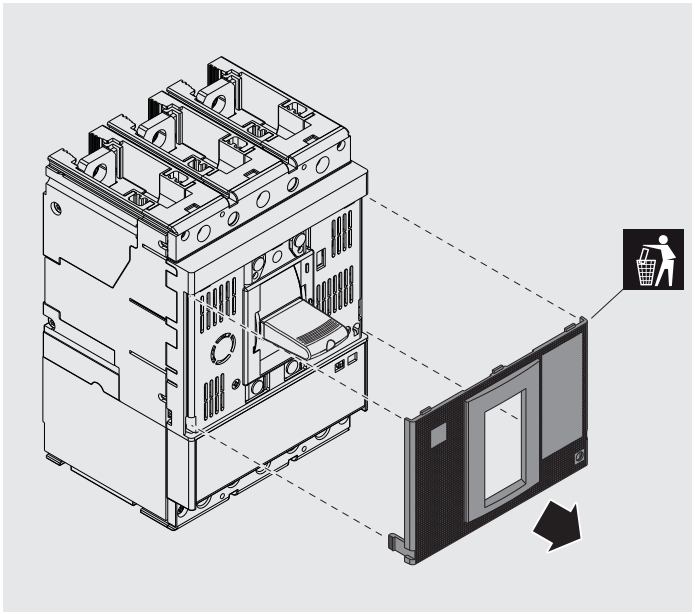

3

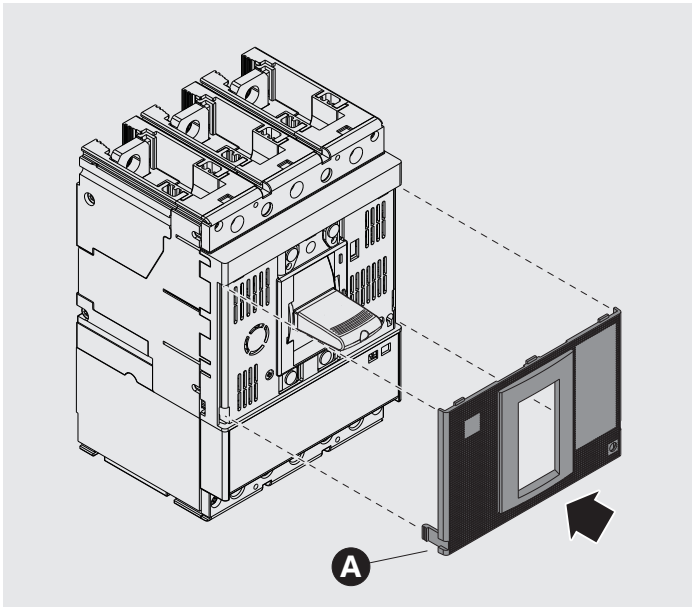

4

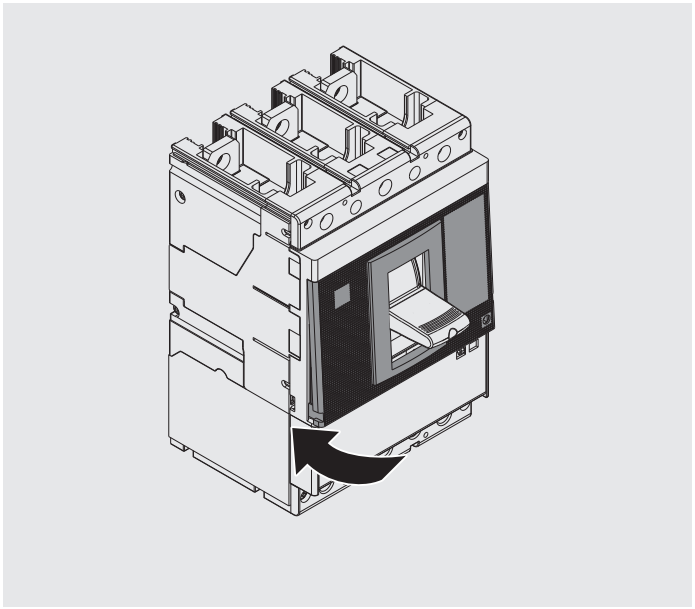

1SDH002011A1920 - ECN000353147 - Rev. A

abb.com

© Copyright 2024 ABB. All rights reserved.
Specifications subject to change without notice.