Photoelectric Sensors

BOS R090K-PU-RD11-S75
Order Code: BOS02A9

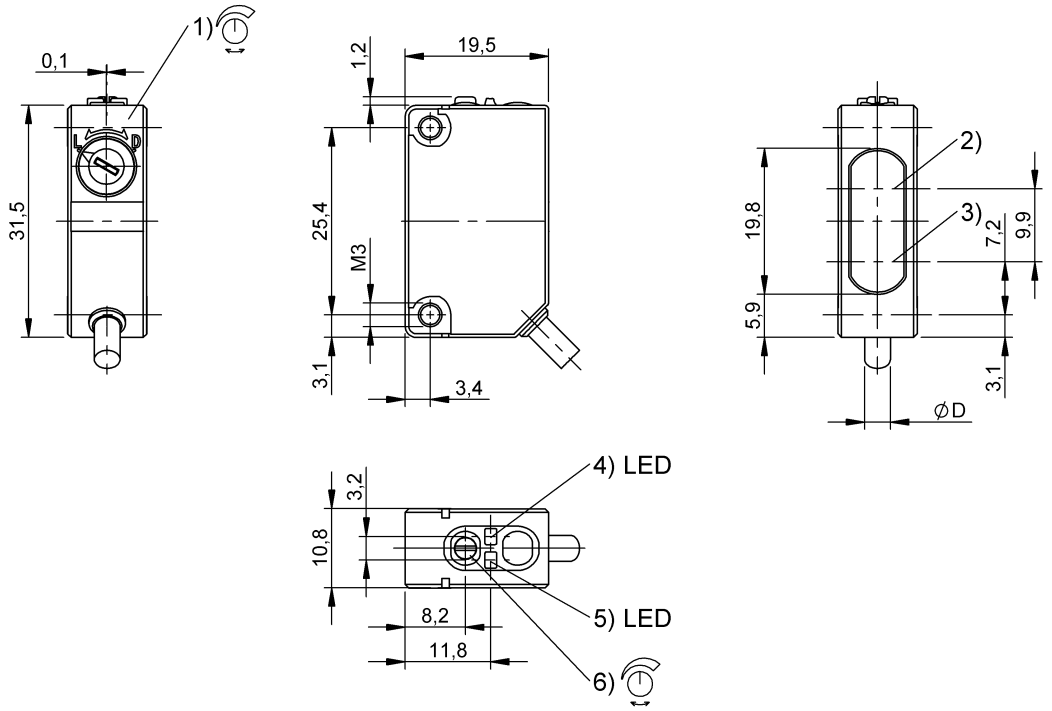

1) Mode settings, 2) Optical axis receiver, 3) Optical axis emitter, 4) Power indicator, 5) stability, 6) Sensitivity

Basic features

Approval/Conformity	cULus CE UKCA EAC WEEE
Principle of operation	Photoelectric sensor
Series	R090K
Style	Square Connection 90°

Display/Operation

Adjuster	Potentiometer 270° Rotary switch 2 positions
Display	Output function- LED yellow Stability - LED green
Setting	Sensitivity (Sn) Light-on/dark-on

Electrical connection

Connection	Connector, M8x1, 4-pin
Polarity reversal protected	yes
Short-circuit protection	yes

Electrical data

No-load current Io max. at Ue	20 mA
Operating voltage Ub	10...30 VDC
Rated operating current Ie	100 mA
Rated operating voltage Ue DC	24 V
Ready delay tv max.	300 ms
Ripple max. (% of Ue)	10 %
Switching frequency	1000 Hz
Turn-off delay toff max.	0.5 ms
Turn-on delay ton max.	0.5 ms
Voltage drop Ud max. at Ie	2 V

Environmental conditions

Ambient temperature	-30...55 °C
IP rating	IP67

Photoelectric Sensors

BOS R090K-PU-RD11-S75
Order Code: BOS02A9

Functional safety

MTTF (40 °C)	90 a

Interface

Switching output	PNP normally open/normally closed (NO/NC)

Material

Housing material	PC PBT
Material sensing surface	PMMA

Mechanical data

Dimension	10.7 x 43.5 x 19.5 mm
Mounting part	Screw M3
Tightening torque max.	0.5 Nm

Optical features

Ambient light max.	10000 Lux
Beam characteristic	Divergent
Light type	LED, red light
Principle of optical operation	Diffuse sensor, energetic
Switching function, optical	dark-on/light-on
Wave length	660 nm

Range/Distance

Range	50...150 mm
Rated operating distance Sn	150 mm

Connector Drawings



Wiring Diagrams

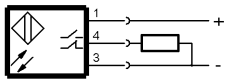

Opto Symbols

