Original instructions

Protective tube for Orion1B and Orion2

Orion WET-xxx and Orion WET-Kxxx



While every effort has been taken to ensure the accuracy of information contained in this book and any associated promotional and information material ABB Jokab Safety cannot accept responsibility for errors or omissions and reserves the right to make any improvements without notice. It is the user's responsibility to ensure that this equipment is correctly designed, specified, installed, cared for and operated to meet all applicable local, national and international codes/regulations. Technical data in our book is correct to the level of accuracy of ABB Jokab Safety´s test procedures as verified by various international approved bodies. Other information (such as application examples, wiring diagrams, operation or use) is intended solely to illustrate the various uses of our products. ABB Jokab Safety does not guarantee or imply that the product when used in accordance with such examples in a particular environment will fulfil any particular safety requirement and does not assume any responsibility or liability for actual use of the product based on the examples given.

ABB Jokab Safety Varlabergsvägen 11, SE-434 39 Kungsbacka, Sweden
www.abb.com/jokabsafety

Overview

General description

The protective tubes Orion WET-xxx and Orion WET-Kxxx are PMMA acrylic tubes used to protect and seal the AOPD of the Orion1 Base and the Orion2 series. Thanks to these protective tubes, the IP sealing of the AOPD is increased from IP65 to IP67, IP68 and IP69K.

The Gore-Tex membrane on the caps prevents entry of water or dirt and condensation inside the tube. The connection cable of the AOPD is protected and kept in to his side by a M16 cable-gland that prevents the entry of water or dirt.

2 stainless steel rotation brackets are provided and guarantee a quick and easy installation. They are mounted on the product caps.

Highlights

- IP67, IP68 and IP69K protection.
- PMMA acrylic tube.
- Unique profile with different lengths suitable for all protected heights the Orion1 Base series (150 – 1800 mm) and Orion2 series (2, 3 and 4 beams).
- Does not compromise the performance of the AOPDS in terms of alignment.
- Do not change the EAA value.

Package contents

The package contains the following items:

a. PMMA transparent tub (1 pc)

b. Lower assembled support (1 pc)

c. Upper assembled support (1 pc)

d. Closing cap with silicone compound OR (2 pcs)

e. INOX rotation brackets (2 pcs)

f. Nuts and bolts:

- - M5 square nut (4 pcs)
- - TE M5x6 UNI 5739 screw (4 pcs)
- - UNI 8842 J5 metallic elastic washer (4 pcs)
- - INOX TCEI M4x8 UNI 5931 screw (6 pcs)
- - A4 UNI 8840 ZB metallic washer (6 pcs)
- - INOX TCEI M4x18 UNI 5931 screw (8 pcs)

Sub-assembly **b-d** and **c-d** are pre-installed and inserted inside the PMMA tube **a** to increase the robustness of the assembly.

Installation

Assembly instructions

First of all, remove closing caps **d** from sub-assemblies **b** and **c**. Then remove **b** and **c** from tube **a**. After these operations, it should like on Figure 1.

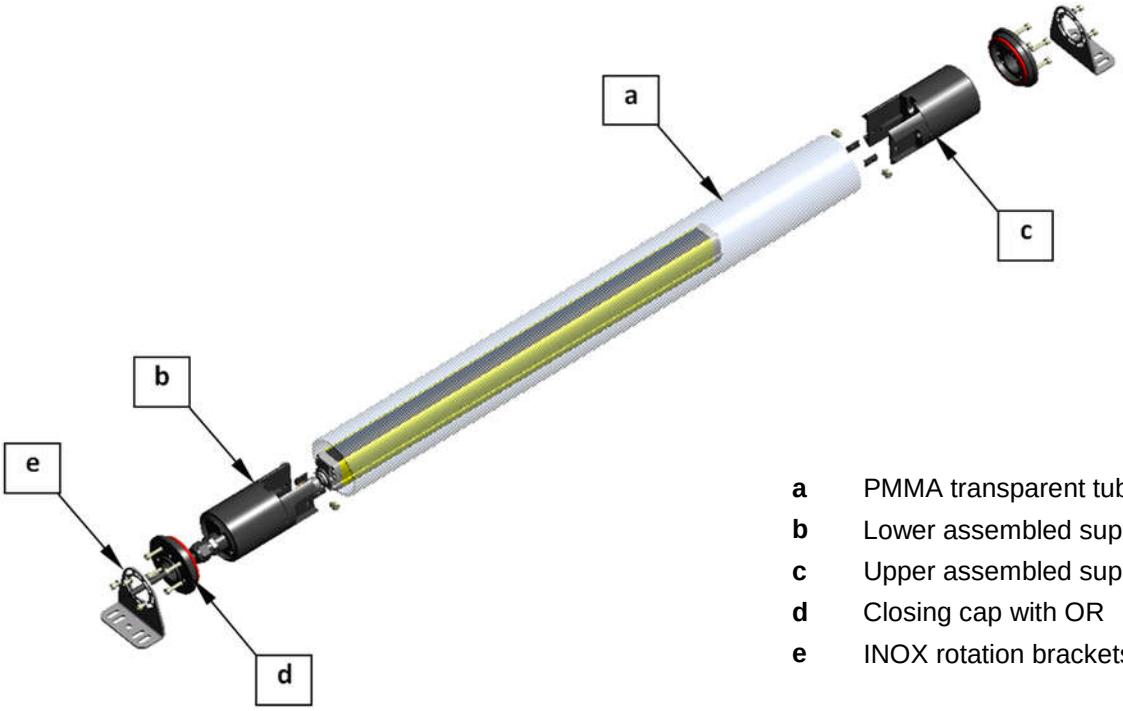

a PMMA transparent tube
b Lower assembled support
c Upper assembled support
d Closing cap with OR
e INOX rotation brackets

Figure 1

Place the M5 square nuts on the inner side of the support wings, aligned with the holes. Fix them with the TE M5x6 UNI 5739 screws (and special washers) but not completely in order to leave a moving range (Figure 2 and Figure 3).

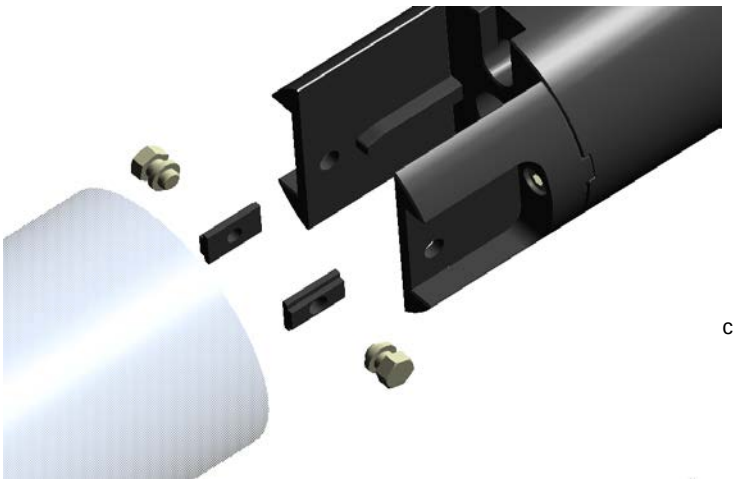

Figure 2

c elastic washer



Figure 3

Then, insert the adapters in the lateral grooves of the Orion AOPD (Figure 4) until the back side is reached. Then, fully tighten the screws to fix the AOPD to **c**. Connect the cable to the AOPD and repeat the previous operation for part **b**, making sure to insert the cable of the AOPD through the hole of the M16 cable gland before completely tightening the screws (Figure 5).

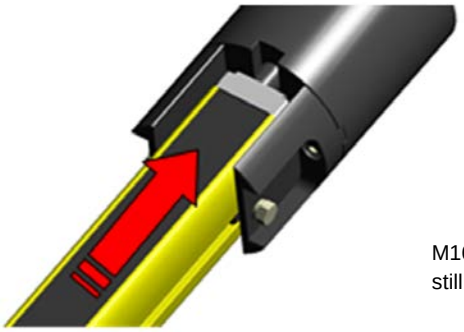

Figure 4

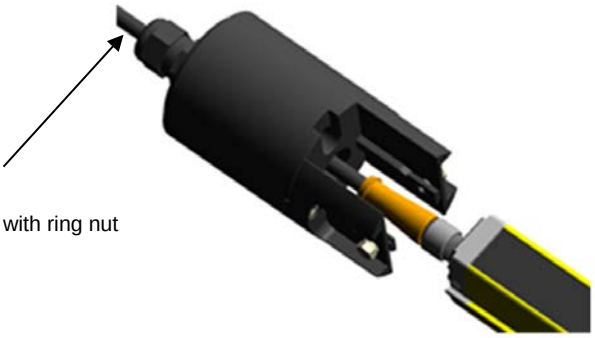

Figure 5

When both parts **b** and **c** are completely assembled with the AOPD, firmly tighten the nut of the cable-gland to fix the cable. Check once again that the M5x6 UNI TE 5739 screws are well locked on their elastic washers.

Once the system looks like Figure 6, it can be inserted inside the transparent tube (Figure 7).



Figure 6



Figure 7

At this point, the 2 closing caps with corresponding OR gasket have to be prepared as shown on Figure 8. Then, apply them to both the upper and lower sides of the PMMA tube.



Figure 8



Figure 9

Complete the mounting by tightening the 4 INOX TCEI M4x18 UNI 5931 screws on both sides for the complete compression of the OR seal against the tubular inner surface (Figure 9).

For brackets mounting, place them on both caps aligned with the appropriate bracket central hole, and then lock in the desired angular position, with 3 INOX TCEI M4x8 UNI 5931 screws (Figure 10).

The bracket is designed to allow all the "main" positions, with intermediate angular adjustment range within 20 and 30 degrees depending on the position required (Figure 11 and Figure 12).

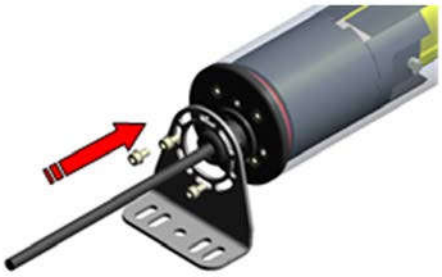

Figure 10

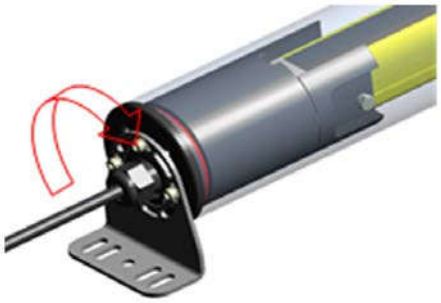

Figure 11

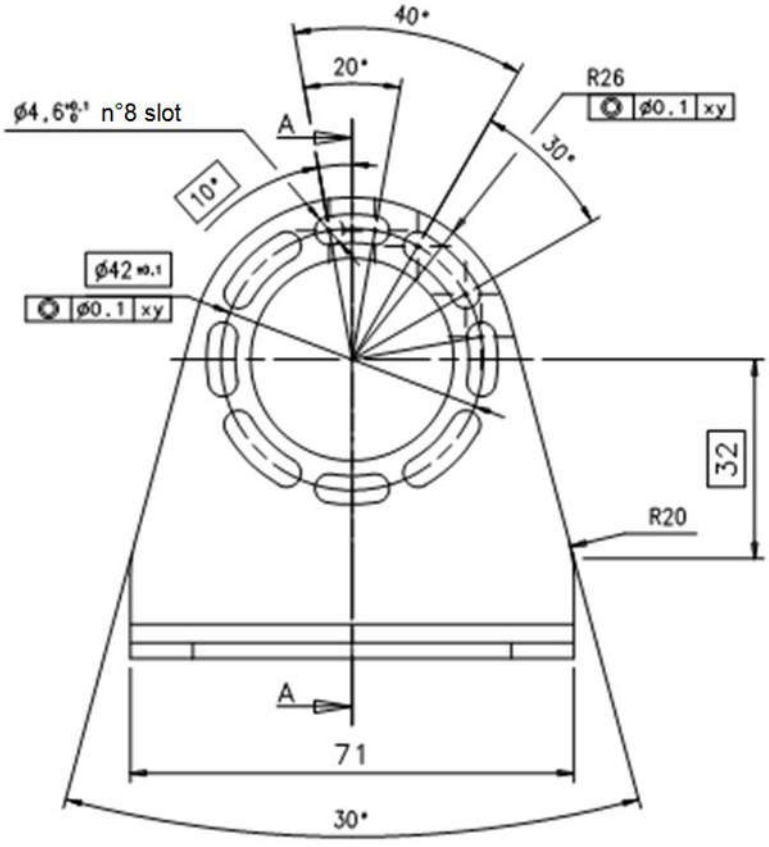

Figure 12

Technical data

Optical data	
Operative distance / reduction factor:	10% for each tube
EAA aberration (Effective Aperture Angle)	None
Mechanical data	
Body material:	PMMA POLICRIL
Thickness	4 mm
Protection grade	IP67, IP68 and IP69K

Model overview

Type	Article number	Description
Orion WET-015	2TLA022313R0000	Orion1 Base - Protective tube H = 150 mm
Orion WET-030	2TLA022313R0100	Orion1 Base - Protective tube H = 300 mm
Orion WET-045	2TLA022313R0200	Orion1 Base - Protective tube H = 450 mm
Orion WET-060	2TLA022313R0300	Orion1 Base - Protective tube H = 600 mm
Orion WET-075	2TLA022313R0400	Orion1 Base - Protective tube H = 750 mm
Orion WET-090	2TLA022313R0500	Orion1 Base - Protective tube H = 900 mm
Orion WET-105	2TLA022313R0600	Orion1 Base - Protective tube H = 1050 mm
Orion WET-120	2TLA022313R0700	Orion1 Base - Protective tube H = 1200 mm
Orion WET-135	2TLA022313R0800	Orion1 Base - Protective tube H = 1350 mm
Orion WET-150	2TLA022313R0900	Orion1 Base - Protective tube H = 1500 mm
Orion WET-165	2TLA022313R1000	Orion1 Base - Protective tube H = 1650 mm
Orion WET-180	2TLA022313R1100	Orion1 Base - Protective tube H = 1800 mm
Orion WET-K050	2TLA022313R3000	Orion2 - Protective tube H = 500 mm
Orion WET-K080	2TLA022313R3100	Orion2 - Protective tube H = 800 mm
Orion WET-K090	2TLA022313R3200	Orion2 - Protective tube H = 900 mm
Orion WET-K120	2TLA022313R3300	Orion2 - Protective tube H = 1200 mm

Dimensions

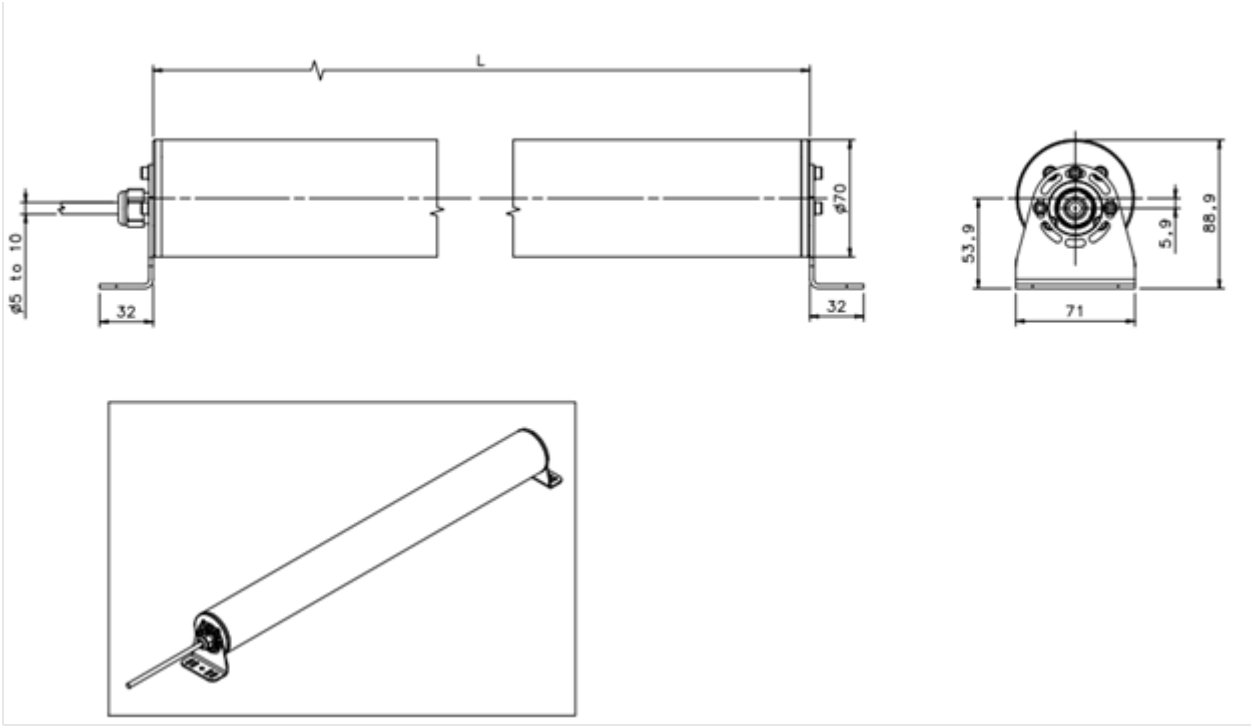

NB: All dimensions in millimetres.

Model	L [mm]
Orion WET-015	373,5
Orion WET-030	520,7
Orion WET-045	670,8
Orion WET-060	820,7
Orion WET-075	970,8
Orion WET-090	1120,7
Orion WET-105	1270,7
Orion WET-120	1420,8
Orion WET-135	1570,7
Orion WET-150	1720,8
Orion WET-165	1870,8
Orion WET-180	2020,8
Orion WET-K050	808
Orion WET-K080	1108
Orion WET-K090	1208,5
Orion WET-K120	1508,5