SCR - Viper Safety Relays

SCR-31-i / SCR-21-i / SCR-31P-i

The new generation of safety relays from IDEM

- Single or Dual channel operation
- Monitored Manual or Auto Start/Reset
- Up to 3 NC safety output contacts
  1 NO Auxiliary output contacts
  (Depending on model No.)
- Contactor feedback check
- Easy diagnosis of status via 6 LEDs
- Up to PLe, SILCL 3, Category 4
- 22.5mm DIN rail mounting
- 24Vac/dc operation
- Emergency stop and guard interlock monitoring
- Output expansion units available to increase number of outputs.

The Viper Safety Relays range from IDEM are designed to meet the latest safety standards and offer enhanced LED diagnostics and simplified wiring. Applications include safety interlock switches, emergency e-stop devices door guard monitoring. The SCR-31P-i is design to be compatible with OSSD devices.(e.g. Light Curtains)

The Viper Safety Relays range includes output expansion units that can be directly wired to SCR-21-i / SCR-31-i / SCR-31P-i safety relays to increase the number of safety output contacts. The expansion modules are available with either immediate or time-delayed output contacts.

The SCR-21-i / SCR-31-i / SCR-31P-i internal logic uses force guided relays to achieve cross monitoring, this ensures that a single fault does not lead to the loss of the safety function and that all faults are detected at or before the next safety demand.



Product Safety Functional Safety
TÜVRheinland CERTIFIED
www.tuv.com ID 0600000000

c UL us

Functional Description

When the control line inputs are closed and the start/reset condition has been met the safety output contacts close.
The safety relay outputs open when the inputs are de-activated or if there is a power failure. When dual channel inputs are used it is not necessary to synchronise switching of the input channels.

When operating in the monitored manual reset configuration the reset button must perform a make-then-break action before the safety relay will activate.
External device feedback contacts can be monitored via the reset loop.

Block Diagram and Connections

SCR-21-i / SCR-31-i

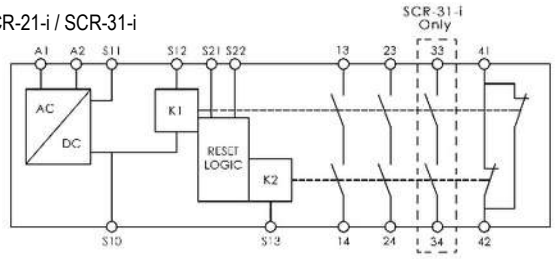

SCR-31P-i

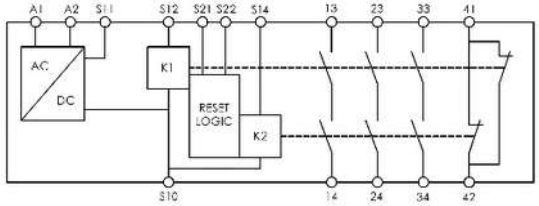

Terminal	Description
A1	Power Supply
A2	Power Supply
S11	24Vd.c. Control voltage
S12	Control Line
S13	Control Line (SCR-21-i / SCR-31-i only)
S14	Control Line (SCR-31P-i only)
S10	Control Line
S21	Auto Start
S21	Monitored Manual Start
13-14	Safety Output Contact 1
23-24	Safety Output Contact 2
33-34	Safety Output Contact 3 (SCR-31-i / SCR-31P-i)
41-42	Auxiliary Output Contact 1

Variants

Part No.	Description
280001	SCR-21-i, AC/DC 24 V, (50-60Hz), Fixed screw terminals
280002	SCR-31-i, AC/DC 24 V, (50-60Hz), Fixed screw terminals
280003	SCR-31P-i, AC/DC 24 V, (50-60Hz), Fixed screw terminals
280001-P	SCR-21-i, AC/DC 24 V, (50-60Hz), Pluggable Terminals
280002-P	SCR-31-i, AC/DC 24 V, (50-60Hz), Pluggable Terminals
280003-P	SCR-31P-i, AC/DC 24 V, (50-60Hz), Pluggable Terminals

Application Circuits

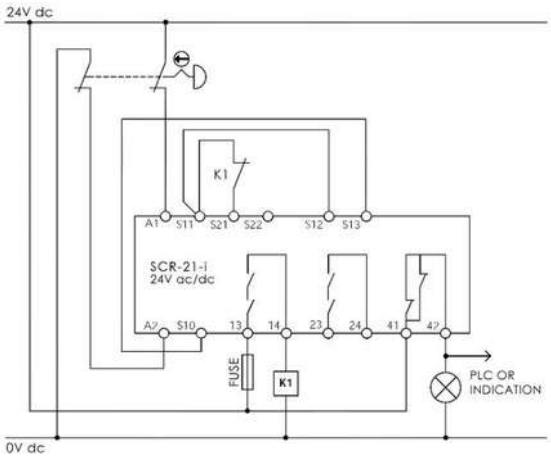

Fig.1 SCR-21-i, Single Channel, E-Stop, Auto Reset

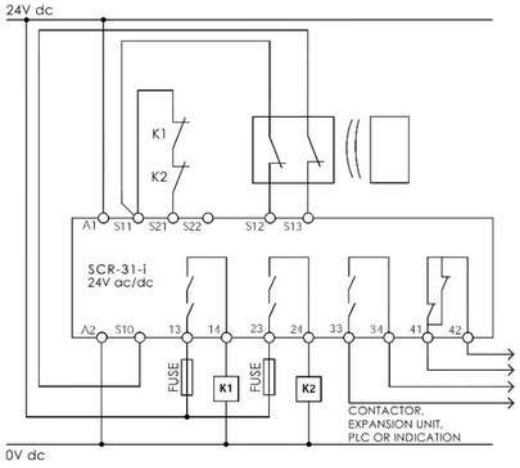

Fig.2 SCR-31-i, Dual Channel, Non-Contact Safety Switch, Auto Reset

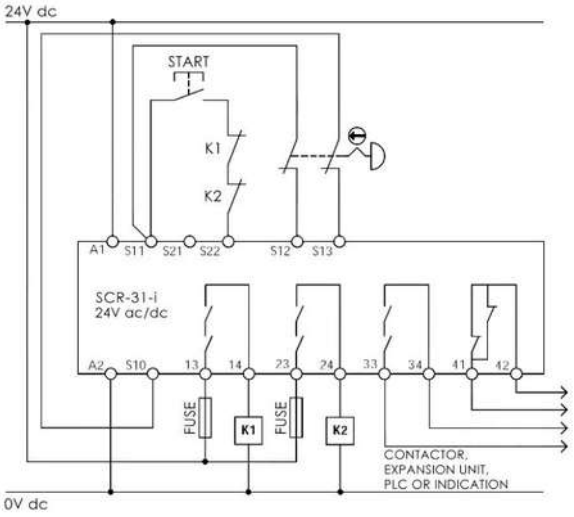

Fig.3 SCR-31-i, Dual Channel, E-stop, Manual Reset

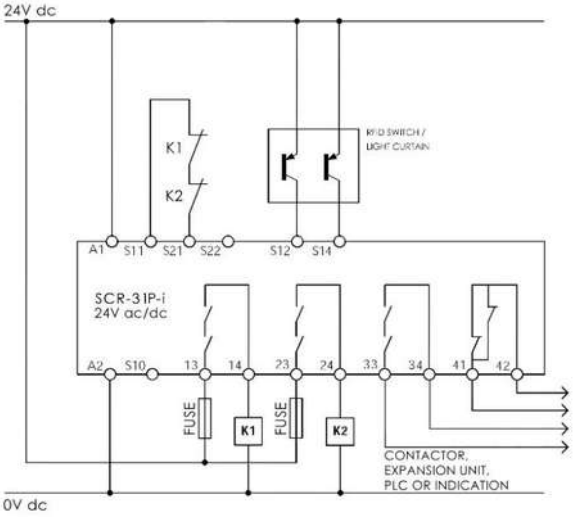

Fig.4 SCR-31P-i, Dual Channel, OSSD Inputs, Auto Reset

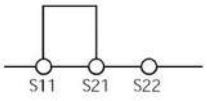

Fig.5 Auto Reset

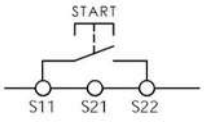

Fig.6 Manual Reset

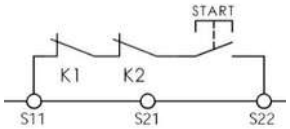

Fig.7 Contactor Feedback Check (Manual Reset)

Electrical Connection

- A power supply unit with electrical isolation from the mains supply must be connected.
- External fusing of each safety output contact is necessary, a 4A. slow-blow or 6A. quick action) must be provided.
- The maximum cabling and connecting resistance of control lines must not be exceed 300 ohms.

IDEM Safety Switches

Viper Safety Relays
SCR-21-i / SCR-31-i / SCR-31P-i

Dimensions

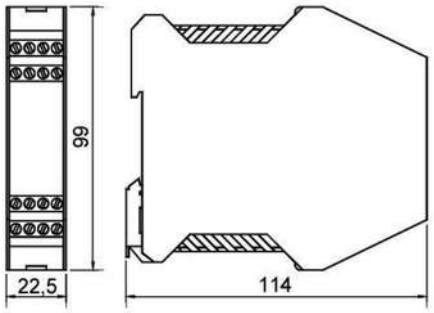

Diagnostic LEDs

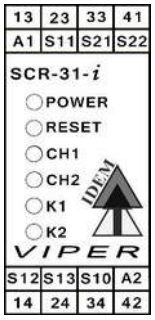

POWER	Power to the safety relay.
RESET	Reset loop S11-S21 or S11-S22 is closed.
CH1	Channel 1 control loop S11-S21 is closed.
CH2	Channel 2 control loop S13-S10 is closed.
K1	Power to Internal relay K1.
K2	Power to Internal relay K2.

Safety Characteristics

Characteristic Data according to **IEC 62061**

Safety Integrity Level	SIL3
PFH	4.1 E -10 (1/h) (0.4% of SIL3 (1 E -07 (1/h))
PFD_{av}	3.6 E -05 (1/h) (3.6% of SIL3 (1 E -03)

Characteristic Data according to **EN ISO 13849-1**

Performance Level	e
Category	4
$MTTF_d$	142a (High)
Diagnostic Coverage	99% (High)

Specification

Standards		EN/ISO13849-1; EN /SO13849-2; EN62061; EN60204-1; EN/ISO12100;UL508
Power supply Circuit		
Rated operating voltage		24V AC/DC
Operating voltage tolerance		-15% - +10%
Rated supply frequency		50Hz – 60Hz
Rated supply current		75mA
Power consumption	24V AC/ DC	2W
Control Circuits		
Rated output voltage	S11	24V DC
Input current	S11..S14	100mA
Response time		100ms
Release time		25ms
Recovery time		Approx. 1s
Output Circuits		
Rated output voltage		250VAC
Max. current per output		6A
Max. total current all outputs		8A
Safety contact breaking Capacity	AC	250V, 1500V, 6A, Ohmic 230V, 4A for AC-15
	DC	24V, 30W, 1.25A, Ohmic 24V, 30W, 2A, DC-13
Minimum contact load		10V 10mA
Min. contact fuses		4A Slow blow, 6A Fast blow
Contact material		$AgSnO_2$
Contact service life		10 x 10^6
General Data		
Rated impulse withstand voltage		4kV
Rated insulation voltage		250V
Degree of protection		IP
Temperature range		-20C + 55C
Degree of contamination		2
Overvoltage category		III
Weight		0.3kg
Mounting		Any position

SAFETY WARNINGS



- **Installation should only be carried out by competent and authorised personnel and in accordance with the instructions in this manual.**
- **Only make electrical connections when the device is isolated from the main supply.**
- **If "Automatic Start" is selected be aware that safety output contacts will switch immediately after the power supply is connected.**
- **Opening the device will void the warranty. Never attempt to repair any device.**
- **Adhere to Safety Checks.**
- **DO NOT DEFEAT, TAMPER, OR BYPASS THE SAFETY FUNCTION. FAILURE TO DO SO CAN RESULT IN DEATH OR SERIOUS INJURY.**

- **L'installation doit être effectuée par un personnel compétent et autorisé et en conformité avec les instructions de ce manuel.**
- **faites uniquement des connexions électriques lorsque l'appareil est isolé de l'alimentation principale.**
- **Si "Démarrage automatique" est sélectionné être conscient que les contacts de sortie de sécurité passeront immédiatement après l'alimentation est connectée.**
- **Ouverture de l'appareil annule la garantie. Ne jamais tenter de réparer tout appareil.**
- **Adhérer à des contrôles de sécurité.**
- **NE DÉFAITE PAS, SABOTAGE, OU DE CONTOURNER LA FONCTION DE SÉCURITÉ. MANQUEMENT À S'Y PEUT ENTRAÎNER LA MORT OU DES BLESSURES GRAVES**

Installation and Maintenance

Installation should as per EN 60204-1 in addition to any local regulations. The safety relay should be mounted inside a cabinet enclosure and on a 35mm DIN rail according to DIN EN 60715. No maintenance is required, there are no serviceable parts. (Refer to Safety Checks). The product is designed to be a component of a customised safety orientated control system. It is the responsibility of the user to ensure the correct overall functionality of its systems and machines. IDEM, its subsidiaries and affiliates, are not in a position to guarantee all of the characteristics of a given system or product not designed by IDEM.

Information Regarding UL 508

Pilot Duty R300, B300
Single contact must be used

250V AC/DC / 6,0A	250V AC/DC / 6,0A
Resistive	General Purpose
Single contact must be used	All contacts at once can be used.

USE COPPER OR COPPER-CLAD ALUMINUM CONDUCTORS

Maximum surround air temperature 40°C

Safety Checks.

1. Ensure the appropriate safety level is achieved for the application function.
2. The safety functions must be tested regularly. For applications were infrequent use is foreseeable, the system must have a manual function test. At least once per month for PLe Cat3/4 or once per year for PLd Cat3 (ISO13849-1 / ISO14119).

EC Declaration of Conformity

Manufacturer: IDEM SAFETY SWITCHES Ltd.
2 Ormside Close, Hindley Industrial Estate, Hindley Green, Wigan, WN2 4HR, UK

Product: Safety Emergency Stop Devices

Model types: SCR-21-i
SCR-31-i
SCR-31P-i

The above products conform to the safety requirements of the following directives and standards:

Machinery Directive 2006/42/EC
EMC Directive 2004/108/EC
Low Voltage Directive 2006/95/EC

EN 13849-1:2008+AC:2009
EN 13849-2:2012
EN 62061:2005+AC:2010+A1:2013
EN 61508 (Parts 1-7): 2011-02
EN 60204-1:2006+A1:2009+AC:2010
EN 50178:1997

Third Party Certification: NB 0035 TUV Rheinland Industrie Service GmbH

M. Mohtasham Managing Director